由于我们在不断努力改进产品，我们保留样本数据更改的权利，敬请谅解。

As we are constantly endeavouring to improve the performance of our equipment.
The company reserves the right to make alteration from time to time and equipment differ from that detailed in this brochure.


**上海连成（集团）有限公司**
SHANGHAI LIANCHENG (GROUP) CO.,LTD.

地址：上海市江桥曹安公路3616–3618号
邮编：201812
总机：(021) 59138888
传真：(021) 59136782
800免费咨询电话：800–820–5009
400免费咨询电话：400-188-5009

Address:3616–3618 Cao'an Road, Jiangqiao Shanghai
P.C.: 201812
Switchboard: (021) 59138888
Fax: (021) 59136782
800 Free consultation Tel:800–820–5009
400 Free consultation Tel：400-188-5009

www.lcpumps.com
webmaster@lcpumps.com



版权所有 翻印必究 ©连成集团
All rights reserved.Pirate is forbidden.



2014 年 第一版 第一次印刷
first printing and first edition in 2014

印刷日期：2014.04.20
Date of printing：2014.04.20


连成集团
LIANCHENG GROUP

# SLCZ 系列标准化工流程泵

## SLCZ SERIES STANDARD CHEMICAL PROCESS PUMP

# 目　录

CONTENTS


**概 述**
Outline　1

**型号意义**
Model meaning　1

**适用范围**
Range of application　1

**运行参数**
Running data　2

**结构特点**
Characteristics of structure　2

**旋转方向**
Rotating direction　2

**结构图**
Structure drawing　3

**P–T图**
P-T Drawing　4

**典型密封冲洗方案**
Classic seal flush plan　5

**型谱图**
Atlas of style　6

**性能曲线图**
Performance curve　7

**外形及安装尺寸图**
External form and installation dimension drawing　23

**管口载荷**
Loading of pipe orifice　63

**泵体材料介质适应表**
Table of the pump casing materials suitable for the media　65




## 概 述 Outline

SLCZ系列标准化工泵系卧式、单级、单吸离心泵，产品符合DIN24256，ISO2858，GB5662标准，是标准化工泵的基本产品。输送低温或高温、中性或有腐蚀性、清洁或含有颗粒、有毒及易燃易爆的介质。

SLCZ series standard chemical pumps are horizontal, single stage, end suction type centrifugal pumps, in accordance with standards of DIN24256, ISO2858, GB5662, they are basic products of standard chemical pump, transferring liquids like low or high temperature, neutral or corrosive, clean or with solid, toxic and inflammable etc.

## 型号意义 Model meaning

SLCZ　100　-　315

- 315：叶轮名义直径(mm) Nominal diameter of impeller
- 100：泵出口直径DN(mm) Diameter of the pump's outlet
- SLCZ：泵系列代号 Code of pump

## 适用范围 Range of application

◆主要应用于化学、石油化工
◆炼油厂、炼钢厂
◆发电厂
◆造纸、纸浆及医药、食品、制糖等工业
◆炼油厂
◆石油化学工业
◆煤加工工业和低温工程

用于输送：

各种温度和浓度的硫酸、硝酸、盐酸和磷酸等无机酸和有机酸。

各种温度和浓度下的氢氧化钠和碳酸钠等碱性溶液。

各种盐溶液。

各种液态石油化工产品，有机化合物。以及其它有腐蚀性的原料和产品。

目前我厂的耐腐蚀材料，能满足上述各种介质的要求。订货时，请用户提供所要输送介质的详细情况。

◆Mainly for chemical or petrol chemical area
◆Refinery or steel plant
◆Power plant
◆Making of paper, pulp, pharmacy, food, sugar etc.
◆Refinery
◆Petrochemical industry
◆Coal processing industry and low temperature projects

For transferring:

Inorganic acid and organic acid in different temperature and content, like sulfuric acid, nitric acid, hydrochloric acid, phosphoric acid etc.

Alkaline solutions like sodium hydroxide solutions and sodium carbonate solutions etc in different temperature and content.

Various kinds of salt solution.

Different liquid petro-chemical products, organic compounds, and other corrosive materials and products.

At present, corrosion-proof materials can meet all above requirements. Once acquirement, users should give detailed information of transferred liquid.

## 运行参数 Running data

口　径：DN　32~300 mm
流　量：Q　~2000 $m^3/h$
扬　程：H　~160 m
工作压力：P　~2 .5 MPa
工作温度：T　-80~+150 ℃

Diameter: 32~300 mm
Capacity: ~2000 $m^3/h$
Head: ~160 m
Working pressure: ~2 .5 MPa
Working temperature: -80℃~+150 ℃

## 结构特点 Characteristics of structure

**泵体**：采用底脚支承结构

**叶轮**：为闭式叶轮。SLCZ系列泵轴向力主要由背叶片或平衡孔来平衡，殘余轴向力同轴承承受。

**泵盖**：与密封压盖构成密封腔体，标准腔体尺寸可配备各种密封型式。

**轴封**：轴封根据使用情况的不同，可以采用填料密封、机械密封。用内冲洗、自冲洗、外冲洗方式对密封进行冲洗，以确保密封的良好工作状态和使用寿命。

**轴**：用轴套保护，防止介质直接与轴接触发生腐蚀，提高轴的使用寿命。

**后拖式设计**：泵采用“后拉出”式结构和加长联轴节，可不必拆卸进出口管路甚至电机，整个转子部件（叶轮、轴承部件、轴封部件等）即可从后部拉出，维修方便。

**Casing**: Foot support structure

**Impeller**: Close impeller. Thrust force of SLCZ series pumps are balanced by back vanes or balance holes, rest by bearings.

**Cover**: Along with seal gland to make sealing housing, standard housing should be equipped with various kinds of seal types.

**Shaft seal**: According to different purpose, seal can be mechanical seal and packing seal. Flush can be inner-flush, self-flush, flush from outside etc, to ensure good work condition and improve life time.

**Shaft**: With shaft sleeve, prevent shaft from corrosion by liquid, to improve life time.

**Back pull-out design**: Back pull-out design and extended coupler, without taking apart discharge pipes even motor, the whole rotor can be pulled out, including impeller, bearings and shaft seals, easy maintenance.

## 旋转方向 Rotating direction

从驱动端看，泵按顺时针方向旋转。

CW viewed from drive end.

**更加详细的技术数据和运行极限见我公司的有关技术资料。**

**More detailed technical data and operating condition will be referred to related technical information of our company.**





## 结构图 Structure drawing

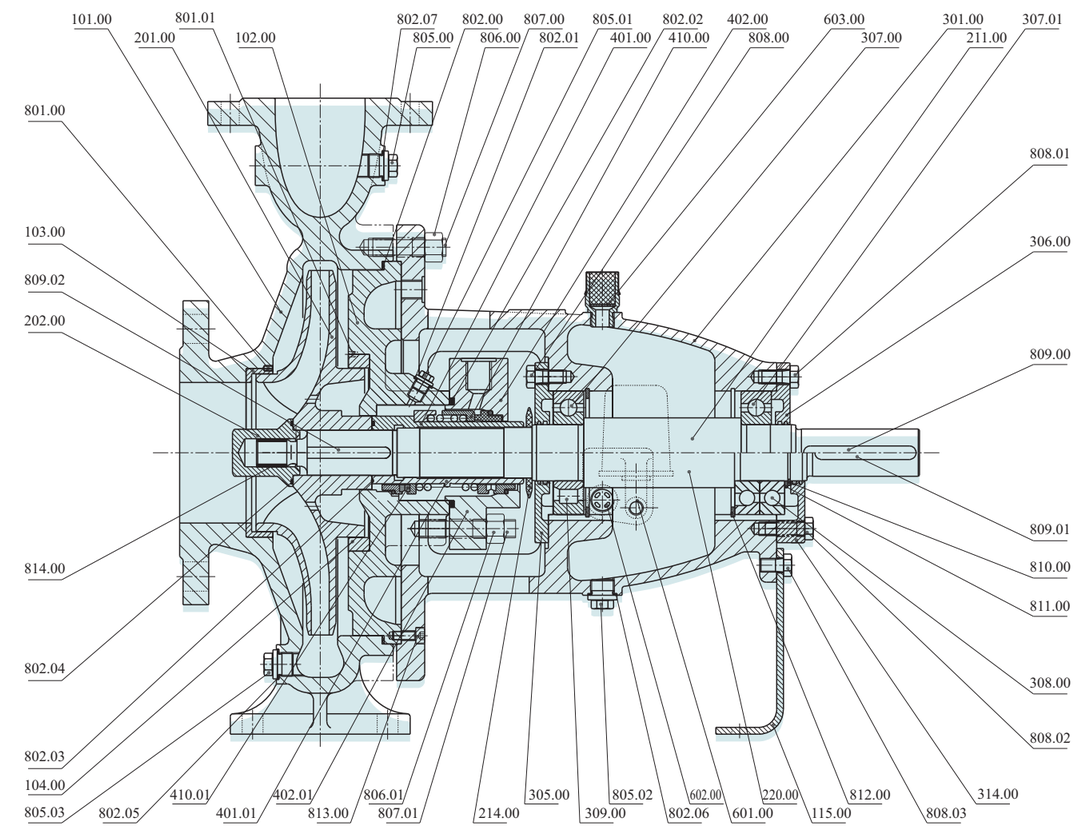


| | | | | | | | | | |
|---|---|---|---|---|---|---|---|---|---|
| 101.00 | 泵 体<br>Pump casing | 214.00 | 折流盘<br>The baffle plate | 314.00 | 轴承盖(重型)<br>Bearing gland (heavy type) | 602.00 | 油　窗<br>Oil window | 810.00 | 弹性挡圈<br>The circlip |
| 102.00 | 泵 盖<br>Pump cover | 220.00 | 轴<br>Shaft | 401.00 | 轴　套<br>Bearing sleeve | 603.00 | 油分离器<br>Oil separator | 811.00 | 垫　片<br>Gasket |
| 103.00 | 泵体口环<br>Casing wear ring | 301.00 | 轴承箱体<br>Bearing housing | 401.01 | 轴　套<br>Bearing sleeve | 801.00 | 紧定螺钉<br>Fastening screw | 812.00 | 弹性挡圈<br>The circlip |
| 104.00 | 泵盖口环<br>Cover wear ring | 305.00 | 前轴承盖<br>Front bearing gland | 402.00 | 机封压盖<br>Machine seal gland | 802.00 | 密封垫片<br>Sealing gasket | 813.00 | 螺　钉<br>Screw |
| 115.00 | 支　脚<br>Support | 306.00 | 后轴承盖<br>After bearing gland | 402.01 | 机封压盖<br>Machine seal gland | 805.00 | 螺　塞<br>Plug | 814.00 | 钢丝螺套<br>Wire threaded sleeve |
| 201.00 | 叶 轮<br>Impeller | 307.00 | 轴　承<br>Bearing | 410.00 | 机械密封<br>Mechanical seal | 806.00 | 螺　母<br>Nut | | |
| 202.00 | 叶轮螺母<br>Impeller nut | 308.00 | 轴　承<br>Bearing | 410.01 | 机械密封<br>Mechanical seal | 807.00 | 螺　柱<br>Stud | | |
| 211.00 | 轴<br>Shaft | 309.00 | 轴　承<br>Bearing | 601.00 | 恒位油杯<br>Constant level oiler | 809.00 | 键<br>Key | | |

## P–T图 P–T Drawing

1、S-5 材料等级的泵工作压力—温度图表。
The pump work pressure-Operating temperature illustration with S-5 material class.

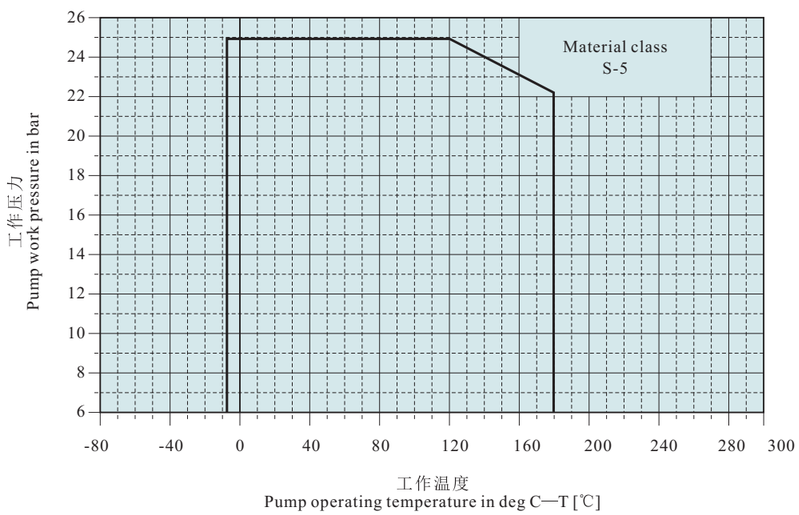


2、A-7/A-8 材料等级的泵工作压力—温度图表。
The pump work pressure-Operating temperature illustration with A-7/A-8 Material class .

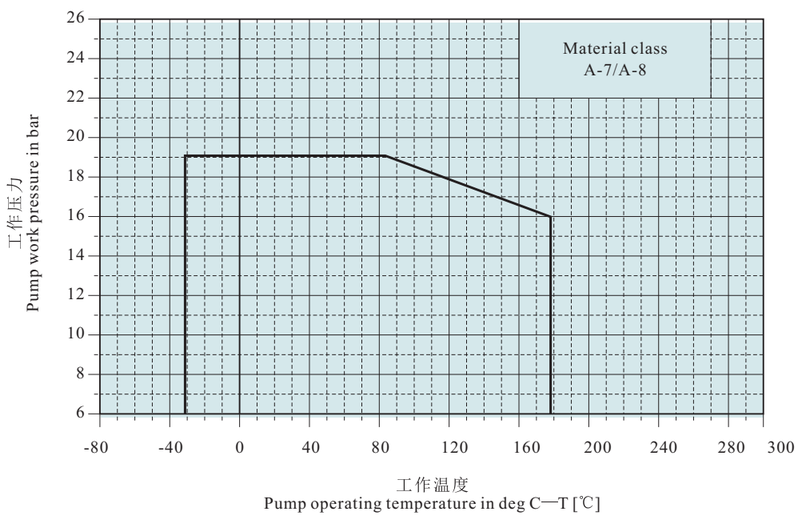


水压试验压力Hydrostatic Test: Ptest=Pmax.WorkPressure×1.5





## 典型密封冲洗方案 Classic seal flush plan

PLAN11：工作介质从泵出口经过管路进入密封腔
Working fluid enters seal housing through pipeline from pump discharge

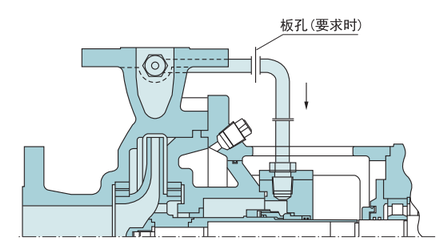


该方案主要用于凝结水，常温汽、柴油等。（高温不能采用此方案）

The plan mainly for condensated water, normal temperature steam, diesel etc.(Not for high temperature condition)

PLAN21：循环液从泵出口通过换热器降温进入密封腔
Circulating liquid enters sealing housing cooled by heat-exchanger at discharge of pump

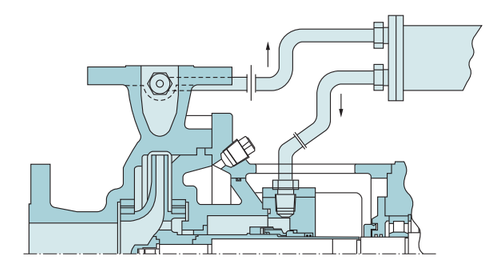

该方案主要用于高温纯净的工作介质中。

Circulating fluid enters seal housing after cooled by heater exchanger from pump discharge.

PLAN32：冲洗液从外部引入密封腔
Flush from outside

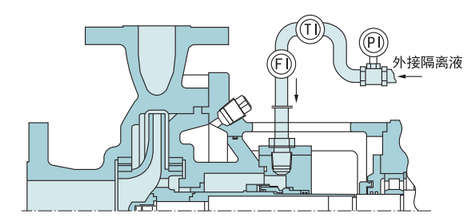


该方案主要用于含有固体颗粒或含有杂质的情况。（注意外来冲洗液避免对介质产生影响）

Flush fluid enters seal housing from outside, the plan mainly for liquid with solid or impurities. (Attention outside flush fluid affect the liquid pumped)

PLAN54：外接液源提供冲洗的背靠背双端面机封
Back to back double mechanical seal for outside flush resource

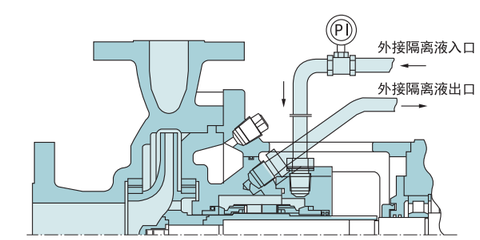

## 型谱图 Atlas of style

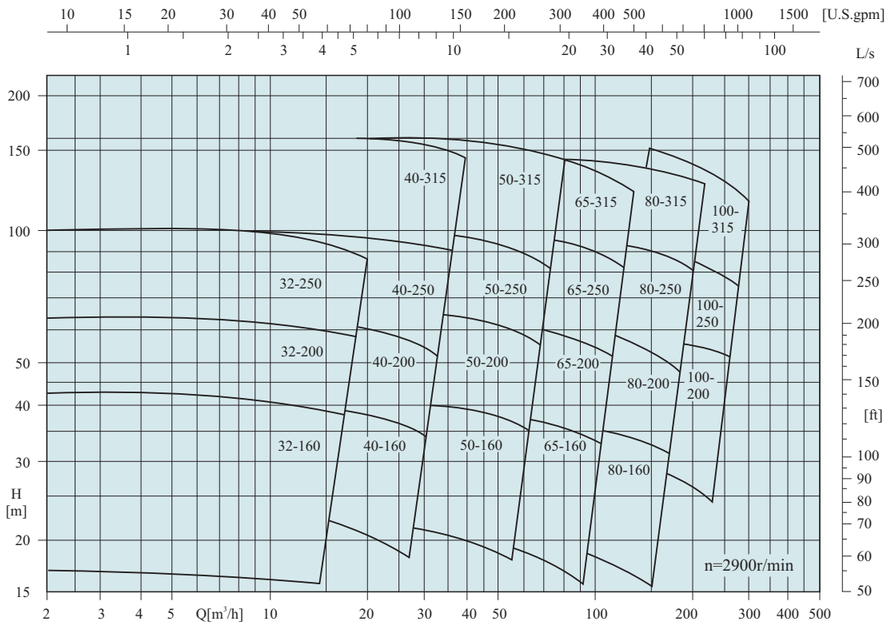


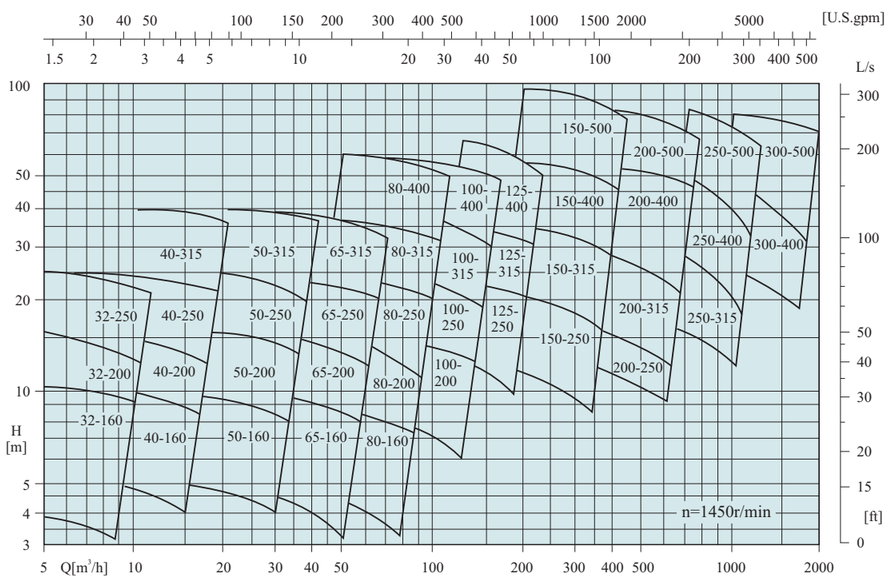






## 性能曲线图 Performance curve

| 型号 Model | SLCZ32-160 | 转速 Speed | 2900r/min |
|---|---|---|---|
| 吸入口径 Suction | 50mm | 排出口径 Discharge | 32mm |

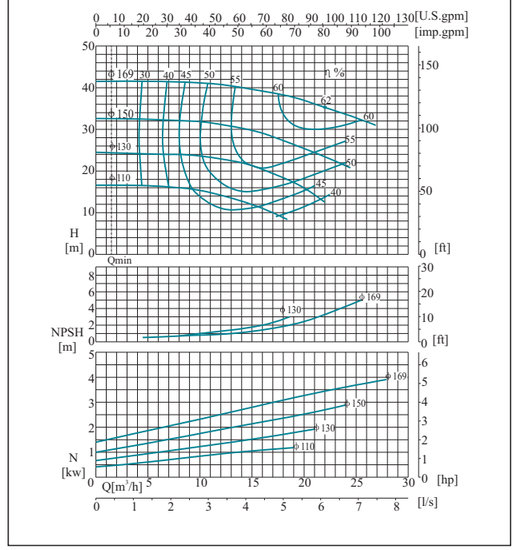


| 型号 Model | SLCZ32-160 | 转速 Speed | 1450r/min |
|---|---|---|---|
| 吸入口径 Suction | 50mm | 排出口径 Discharge | 32mm |

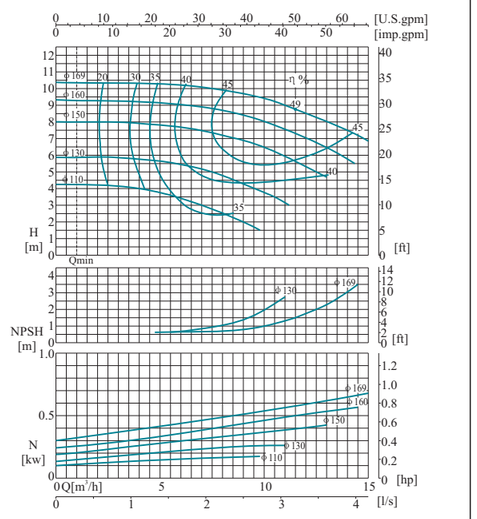


| 型号 Model | SLCZ32-200 | 转速 Speed | 2900r/min |
|---|---|---|---|
| 吸入口径 Suction | 50mm | 排出口径 Discharge | 32mm |

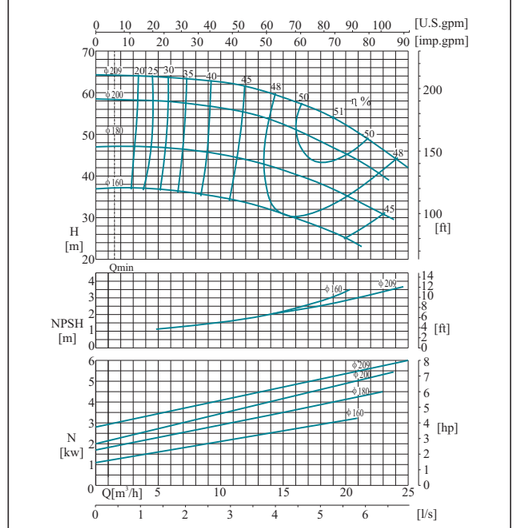


| 型号 Model | SLCZ32-200 | 转速 Speed | 1450r/min |
|---|---|---|---|
| 吸入口径 Suction | 50mm | 排出口径 Discharge | 32mm |

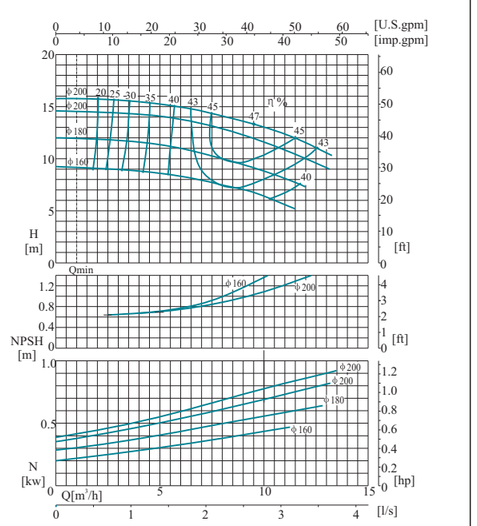

## 性能曲线图 Performance curve

| 型号 Model | SLCZ32-250 | 转速 Speed | 2900r/min |
|---|---|---|---|
| 吸入口径 Suction | 50mm | 排出口径 Discharge | 32mm |

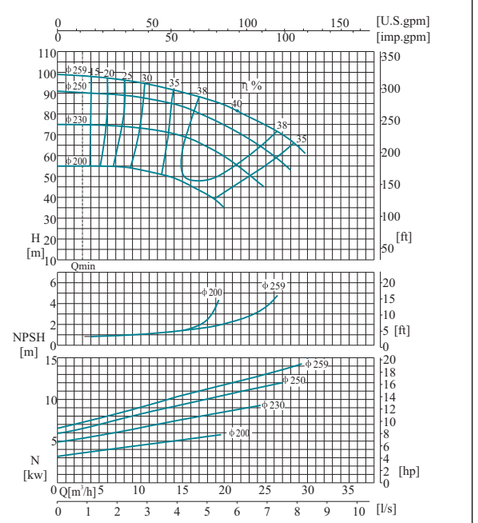


| 型号 Model | SLCZ32-250 | 转速 Speed | 1450r/min |
|---|---|---|---|
| 吸入口径 Suction | 50mm | 排出口径 Discharge | 32mm |

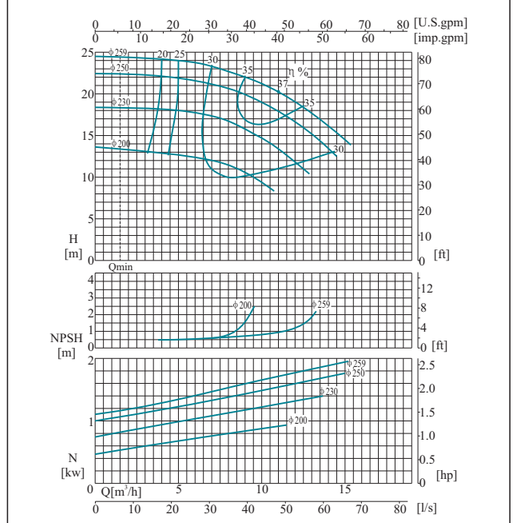


| 型号 Model | SLCZ40-160 | 转速 Speed | 2900r/min |
|---|---|---|---|
| 吸入口径 Suction | 65mm | 排出口径 Discharge | 40mm |

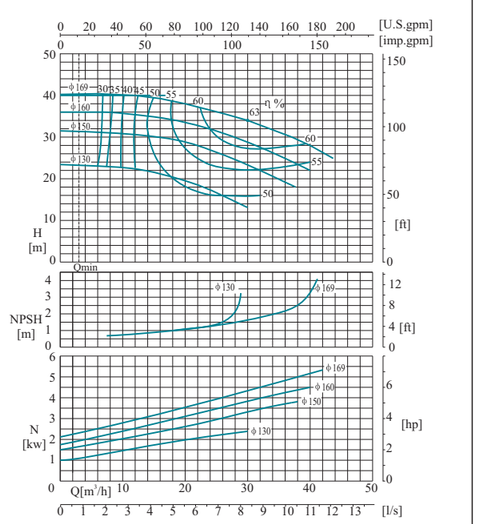


| 型号 Model | SLCZ40-160 | 转速 Speed | 1450r/min |
|---|---|---|---|
| 吸入口径 Suction | 65mm | 排出口径 Discharge | 40mm |

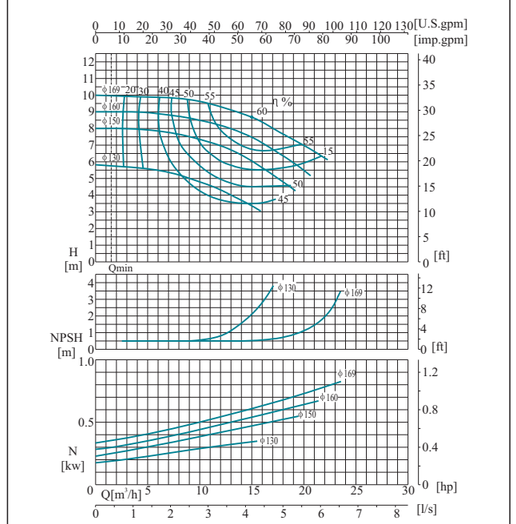






## 性能曲线图 Performance curve

| 型号 Model | SLCZ40-200 | 转速 Speed | 2900r/min |
|---|---|---|---|
| 吸入口径 Suction | 65mm | 排出口径 Discharge | 40mm |

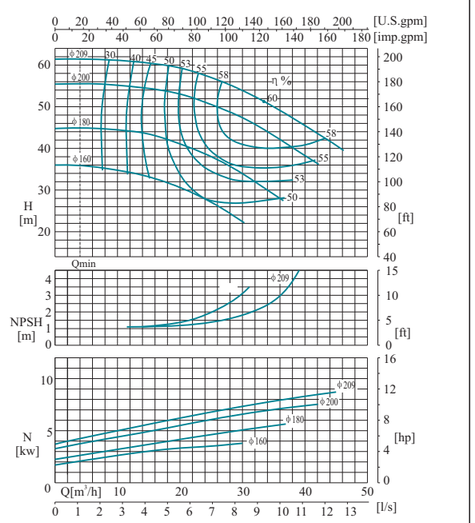


| 型号 Model | SLCZ40-200 | 转速 Speed | 1450r/min |
|---|---|---|---|
| 吸入口径 Suction | 65mm | 排出口径 Discharge | 40mm |

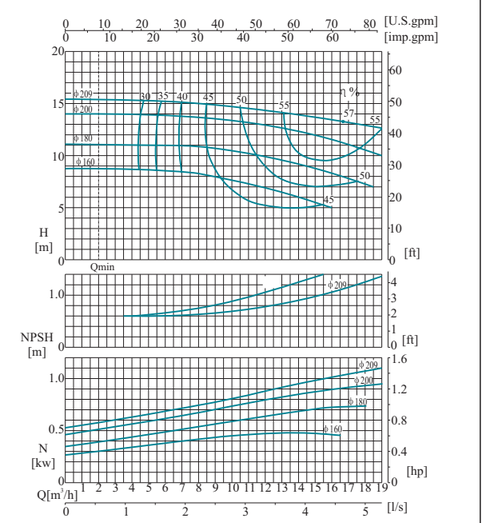


| 型号 Model | SLCZ40-250 | 转速 Speed | 2900r/min |
|---|---|---|---|
| 吸入口径 Suction | 65mm | 排出口径 Discharge | 40mm |

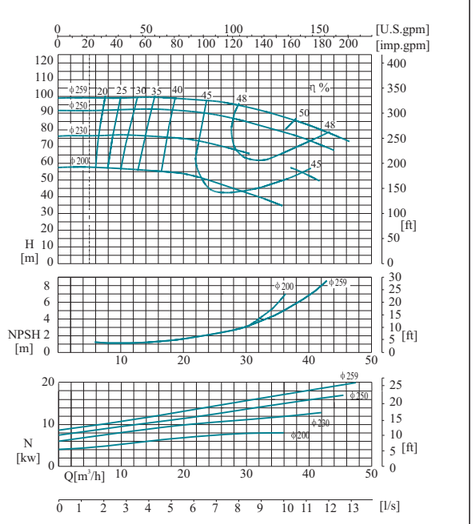


| 型号 Model | SLCZ40-250 | 转速 Speed | 1450r/min |
|---|---|---|---|
| 吸入口径 Suction | 65mm | 排出口径 Discharge | 40mm |

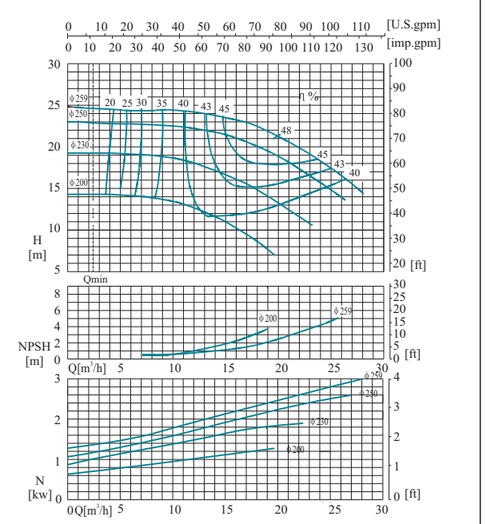

## 性能曲线图 Performance curve

| 型号 Model | SLCZ40-315 | 转速 Speed | 2900r/min |
|---|---|---|---|
| 吸入口径 Suction | 65mm | 排出口径 Discharge | 40mm |

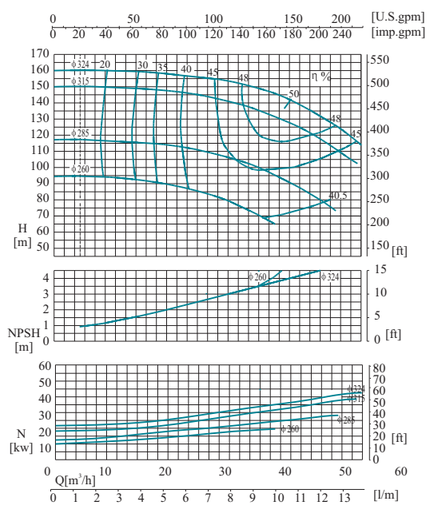


| 型号 Model | SLCZ40-315 | 转速 Speed | 1450r/min |
|---|---|---|---|
| 吸入口径 Suction | 65mm | 排出口径 Discharge | 40mm |

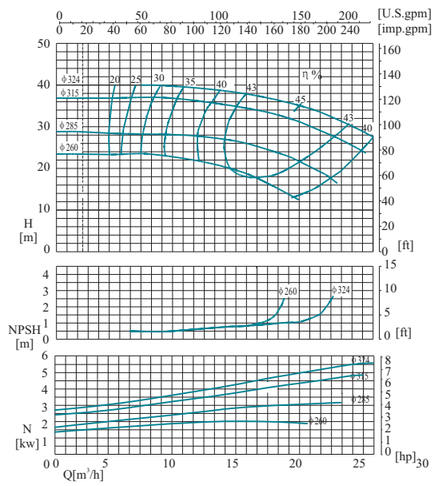


| 型号 Model | SLCZ50-160 | 转速 Speed | 2900r/min |
|---|---|---|---|
| 吸入口径 Suction | 80mm | 排出口径 Discharge | 50mm |

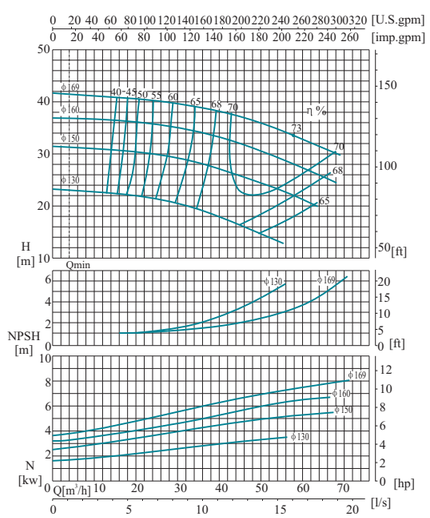


| 型号 Model | SLCZ50-160 | 转速 Speed | 1450r/min |
|---|---|---|---|
| 吸入口径 Suction | 80mm | 排出口径 Discharge | 50mm |

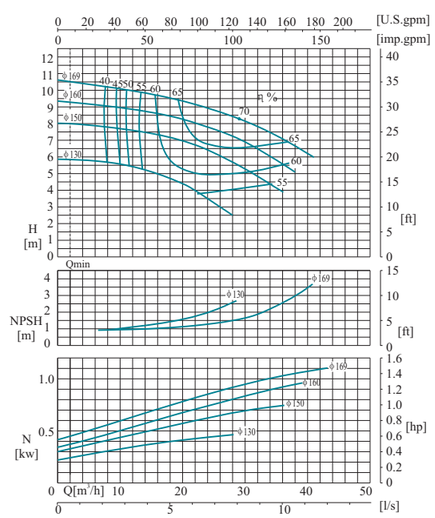






## 性能曲线图 Performance curve

| 型号 Model | SLCZ50-200 | 转速 Speed | 2950r/min |
|---|---|---|---|
| 吸入口径 Suction | 80mm | 排出口径 Discharge | 50mm |

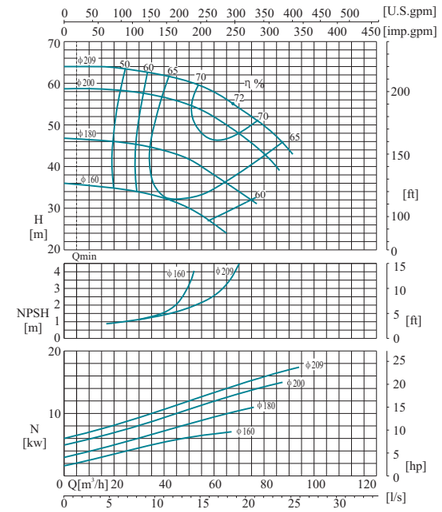


| 型号 Model | SLCZ50-200 | 转速 Speed | 1450r/min |
|---|---|---|---|
| 吸入口径 Suction | 80mm | 排出口径 Discharge | 50mm |

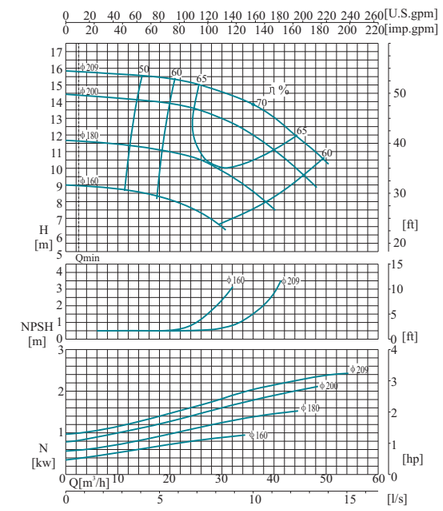


| 型号 Model | SLCZ50-250 | 转速 Speed | 2900r/min |
|---|---|---|---|
| 吸入口径 Suction | 80mm | 排出口径 Discharge | 50mm |

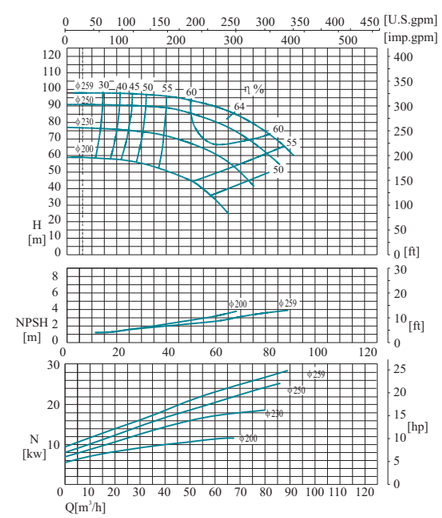


| 型号 Model | SLCZ50-250 | 转速 Speed | 1450r/min |
|---|---|---|---|
| 吸入口径 Suction | 80mm | 排出口径 Discharge | 50mm |

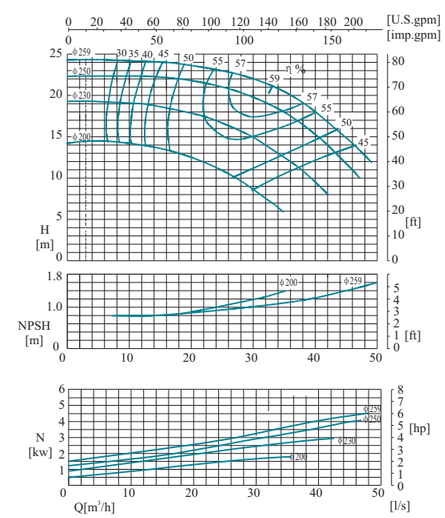

## 性能曲线图 Performance curve

| 型号 Model | SLCZ50-315 | 转速 Speed | 2900r/min |
|---|---|---|---|
| 吸入口径 Suction | 80mm | 排出口径 Discharge | 50mm |

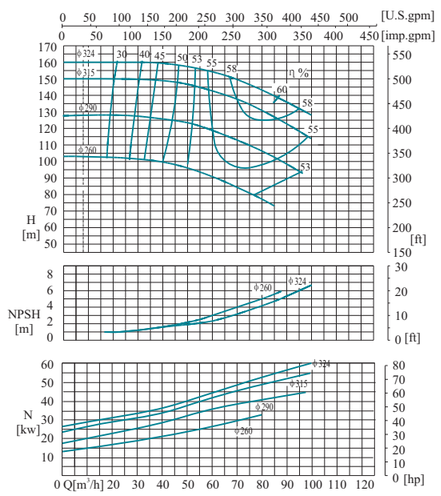


| 型号 Model | SLCZ50-315 | 转速 Speed | 1450r/min |
|---|---|---|---|
| 吸入口径 Suction | 80mm | 排出口径 Discharge | 50mm |

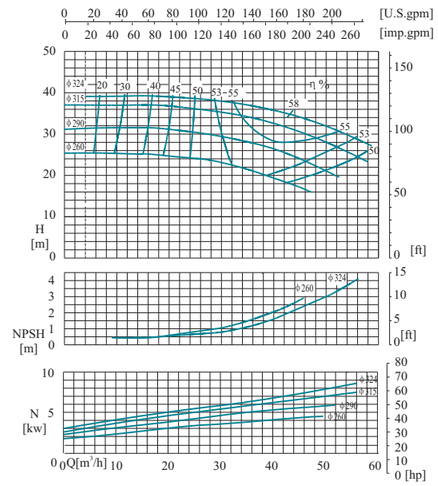


| 型号 Model | SLCZ65-160 | 转速 Speed | 2900r/min |
|---|---|---|---|
| 吸入口径 Suction | 100mm | 排出口径 Discharge | 65mm |

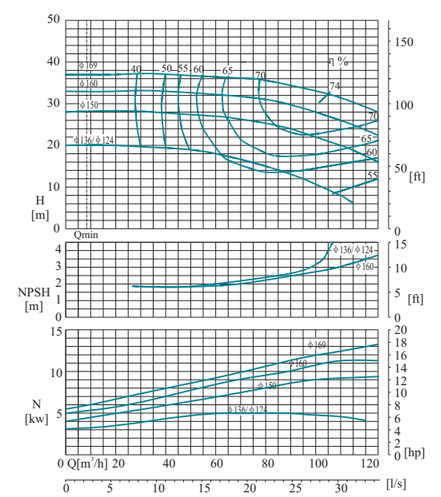


| 型号 Model | SLCZ65-160 | 转速 Speed | 1450r/min |
|---|---|---|---|
| 吸入口径 Suction | 100mm | 排出口径 Discharge | 65mm |

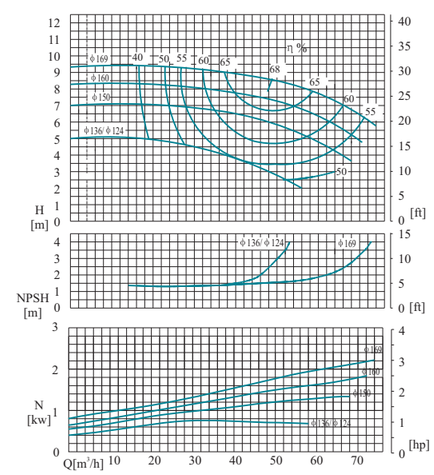




## 性能曲线图 Performance curve

| 型号 Model | SLCZ65-200 | 转速 Speed | 2900r/min |
|---|---|---|---|
| 吸入口径 Suction | 100mm | 排出口径 Discharge | 65mm |

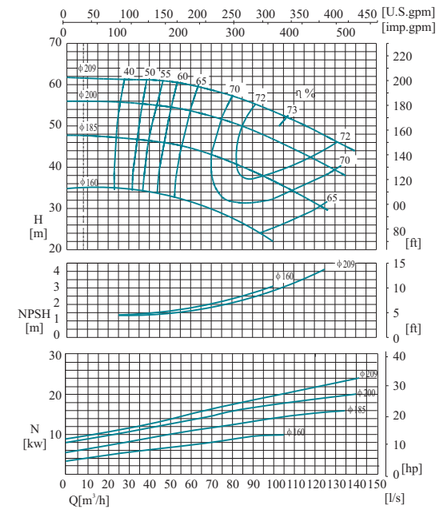


| 型号 Model | SLCZ65-200 | 转速 Speed | 1450r/min |
|---|---|---|---|
| 吸入口径 Suction | 100mm | 排出口径 Discharge | 65mm |

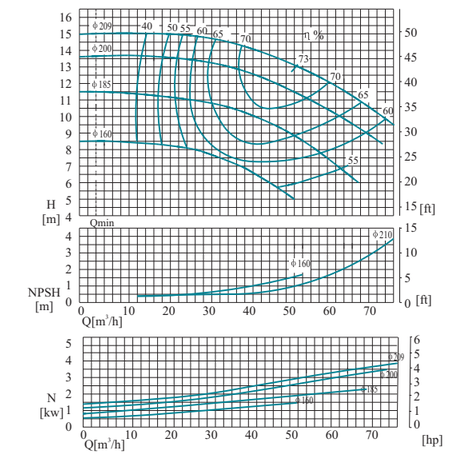


| 型号 Model | SLCZ65-250 | 转速 Speed | 2900r/min |
|---|---|---|---|
| 吸入口径 Suction | 100mm | 排出口径 Discharge | 65mm |

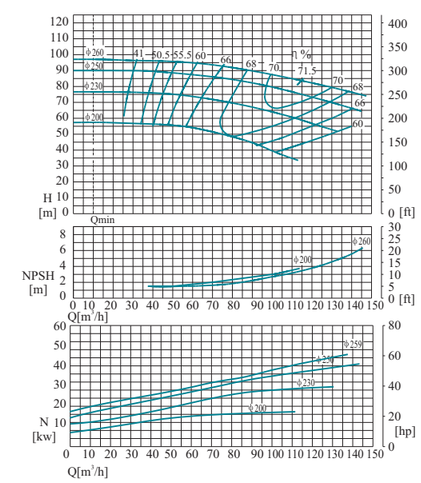


| 型号 Model | SLCZ65-250 | 转速 Speed | 1450r/min |
|---|---|---|---|
| 吸入口径 Suction | 100mm | 排出口径 Discharge | 65mm |

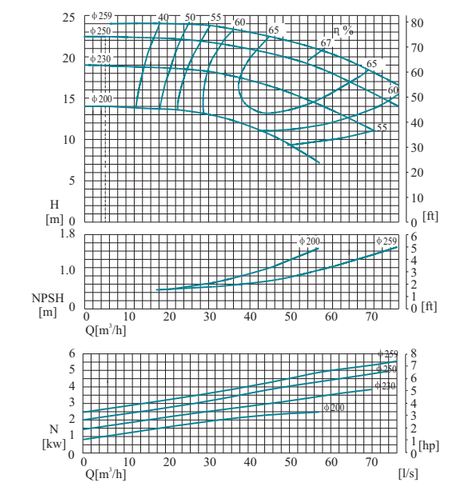

## 性能曲线图 Performance curve

| 型号 Model | SLCZ65-315 | 转速 Speed | 2900r/min |
|---|---|---|---|
| 吸入口径 Suction | 100mm | 排出口径 Discharge | 65mm |

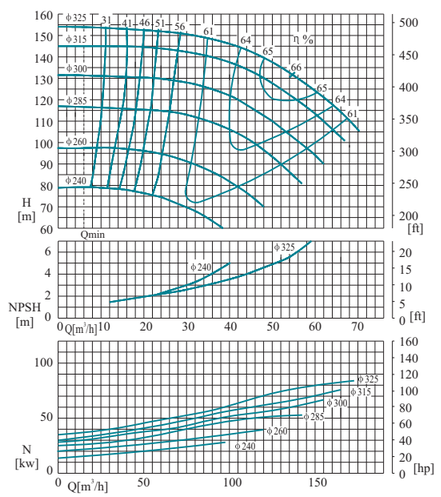


| 型号 Model | SLCZ65-315 | 转速 Speed | 1450r/min |
|---|---|---|---|
| 吸入口径 Suction | 100mm | 排出口径 Discharge | 65mm |

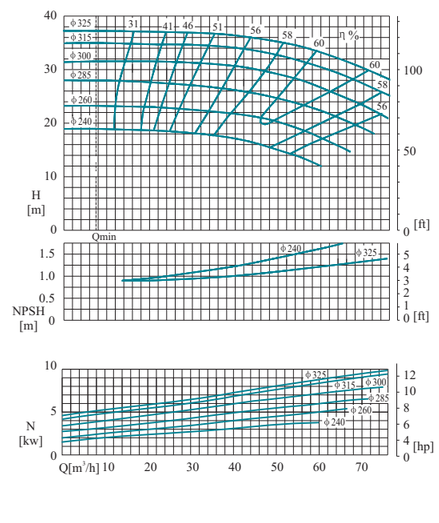


| 型号 Model | SLCZ80-160 | 转速 Speed | 2950r/min |
|---|---|---|---|
| 吸入口径 Suction | 125mm | 排出口径 Discharge | 80mm |

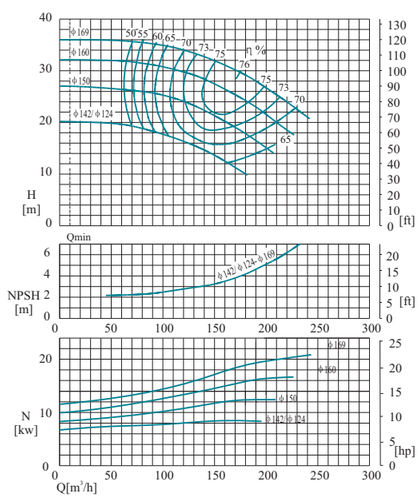


| 型号 Model | SLCZ80-160 | 转速 Speed | 1450r/min |
|---|---|---|---|
| 吸入口径 Suction | 125mm | 排出口径 Discharge | 80mm |

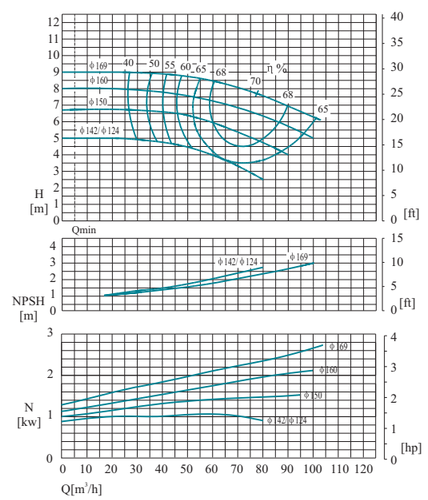






## 性能曲线图 Performance curve

| 型号 Model | SLCZ80-200 | 转速 Speed | 2900r/min |
|---|---|---|---|
| 吸入口径 Suction | 125mm | 排出口径 Discharge | 80mm |

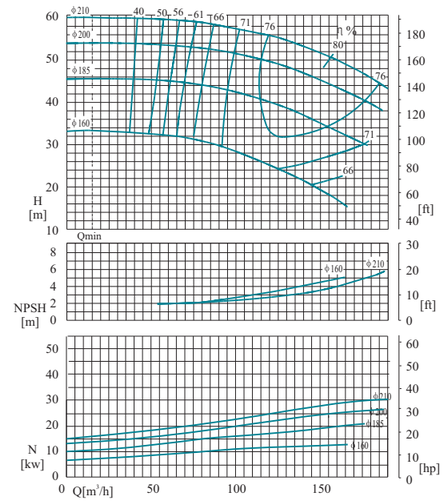


| 型号 Model | SLCZ80-200 | 转速 Speed | 1450r/min |
|---|---|---|---|
| 吸入口径 Suction | 125mm | 排出口径 Discharge | 80mm |

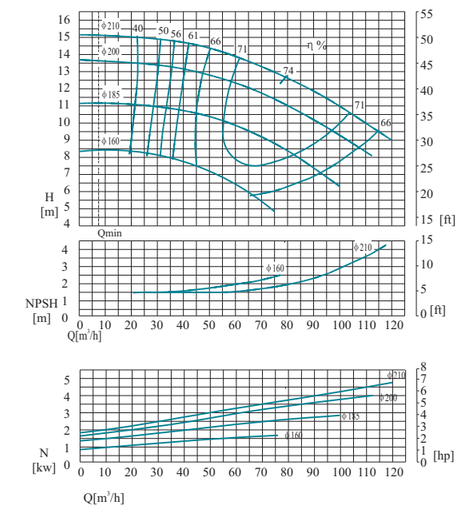


| 型号 Model | SLCZ80-250 | 转速 Speed | 2900r/min |
|---|---|---|---|
| 吸入口径 Suction | 125mm | 排出口径 Discharge | 80mm |

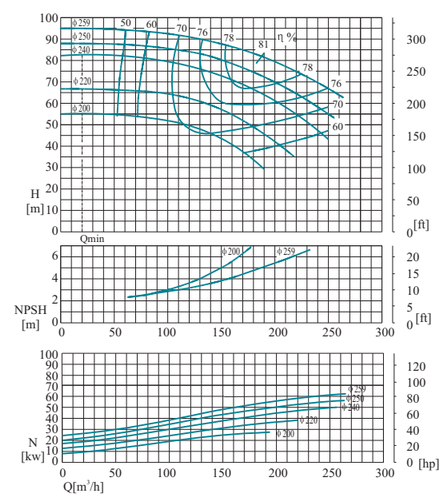


| 型号 Model | SLCZ80-250 | 转速 Speed | 1450r/min |
|---|---|---|---|
| 吸入口径 Suction | 125mm | 排出口径 Discharge | 80mm |

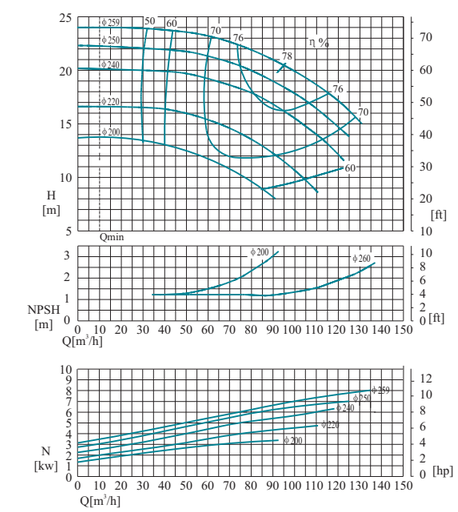

## 性能曲线图 Performance curve

| 型号 Model | SLCZ80-315 | 转速 Speed | 2950r/min |
|---|---|---|---|
| 吸入口径 Suction | 125mm | 排出口径 Discharge | 80mm |

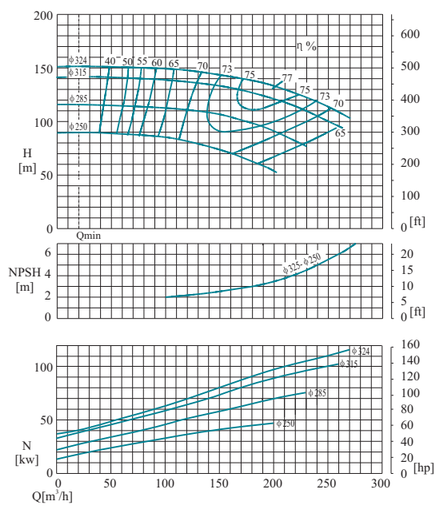


| 型号 Model | SLCZ80-315 | 转速 Speed | 1450r/min |
|---|---|---|---|
| 吸入口径 Suction | 125mm | 排出口径 Discharge | 80mm |

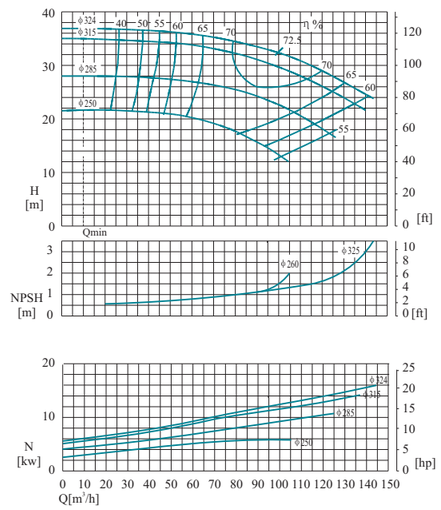


| 型号 Model | SLCZ80-400 | 转速 Speed | 1450r/min |
|---|---|---|---|
| 吸入口径 Suction | 125mm | 排出口径 Discharge | 80mm |

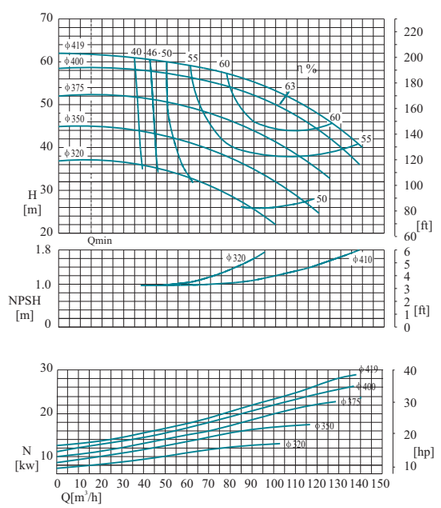


| 型号 Model | SLCZ100-200 | 转速 Speed | 2950r/min |
|---|---|---|---|
| 吸入口径 Suction | 125mm | 排出口径 Discharge | 100mm |

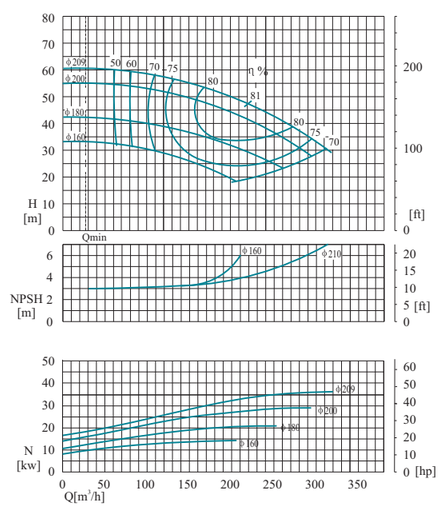






## 性能曲线图 Performance curve

| 型号 Model | SLCZ100-200 | 转速 Speed | 1450r/min |
|---|---|---|---|
| 吸入口径 Suction | 125mm | 排出口径 Discharge | 100mm |

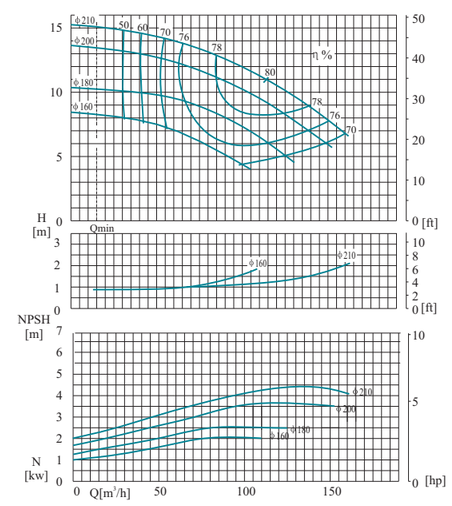


| 型号 Model | SLCZ100-250 | 转速 Speed | 2950rr/min |
|---|---|---|---|
| 吸入口径 Suction | 125mm | 排出口径 Discharge | 100mm |

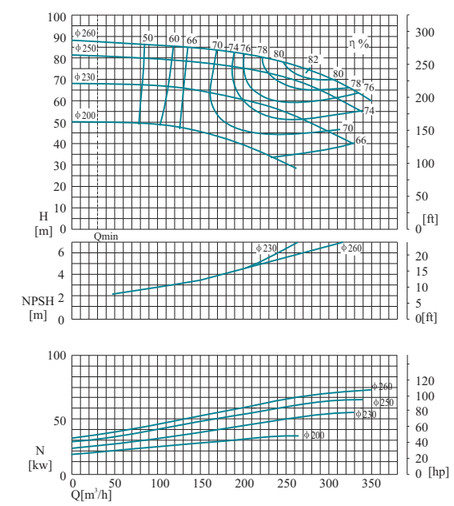


| 型号 Model | SLCZ100-250 | 转速 Speed | 1450r/min |
|---|---|---|---|
| 吸入口径 Suction | 125mm | 排出口径 Discharge | 100mm |

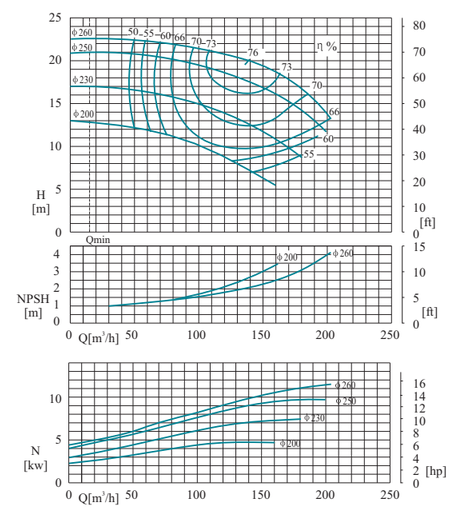


| 型号 Model | SLCZ100-315 | 转速 Speed | 2950r/min |
|---|---|---|---|
| 吸入口径 Suction | 125mm | 排出口径 Discharge | 100mm |

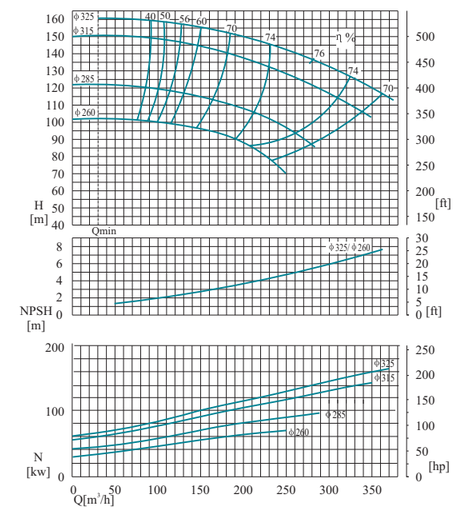

## 性能曲线图 Performance curve

| 型号 Model | SLCZ100-315 | 转速 Speed | 1450r/min |
|---|---|---|---|
| 吸入口径 Suction | 125mm | 排出口径 Discharge | 100mm |

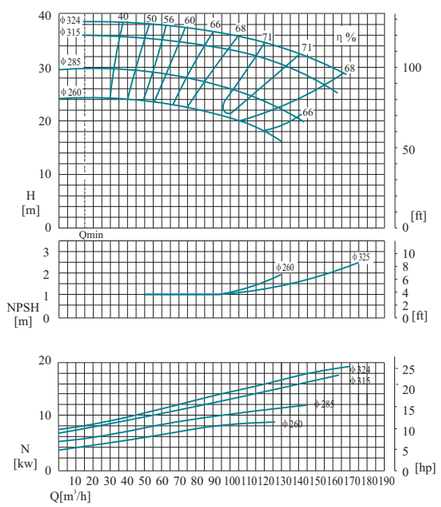


| 型号 Model | SLCZ100-400 | 转速 Speed | 1450r/min |
|---|---|---|---|
| 吸入口径 Suction | 125mm | 排出口径 Discharge | 100mm |

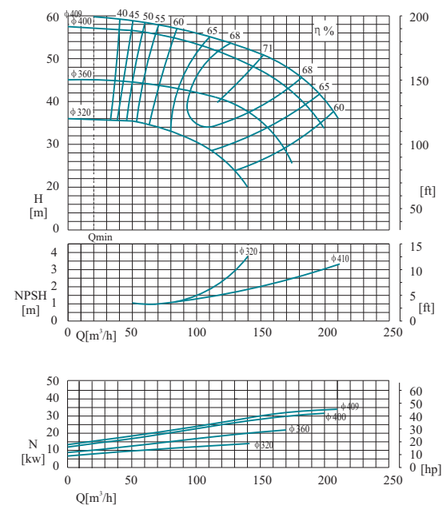


| 型号 Model | SLCZ125-250 | 转速 Speed | 1450r/min |
|---|---|---|---|
| 吸入口径 Suction | 150mm | 排出口径 Discharge | 125mm |

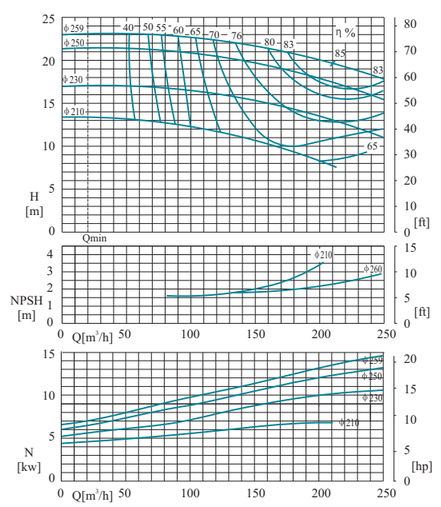


| 型号 Model | SLCZ125-315 | 转速 Speed | 1450r/min |
|---|---|---|---|
| 吸入口径 Suction | 150mm | 排出口径 Discharge | 125mm |

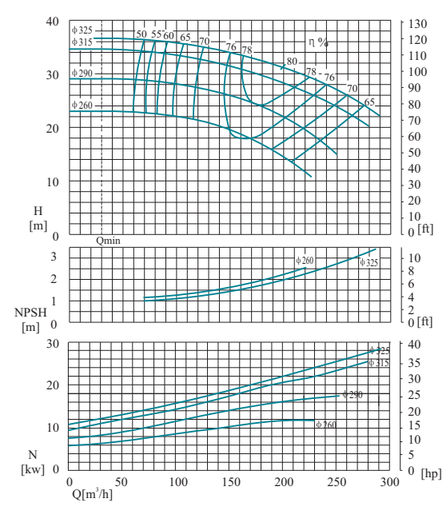




## 性能曲线图 Performance curve

| 型号 Model | SLCZ125-400 | 转速 Speed | 1450r/min |
|---|---|---|---|
| 吸入口径 Suction | 150mm | 排出口径 Discharge | 125mm |

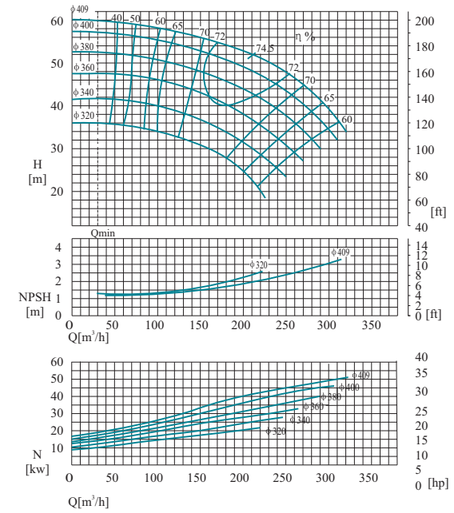


| 型号 Model | SLCZ150-250 | 转速 Speed | 1450r/min |
|---|---|---|---|
| 吸入口径 Suction | 200mm | 排出口径 Discharge | 150mm |

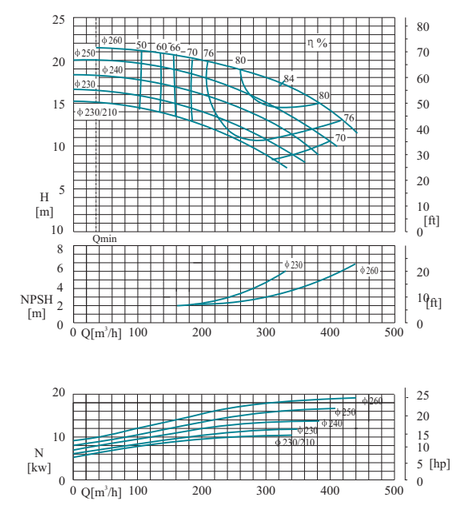


| 型号 Model | SLCZ150-315 | 转速 Speed | 1450r/min |
|---|---|---|---|
| 吸入口径 Suction | 200mm | 排出口径 Discharge | 150mm |

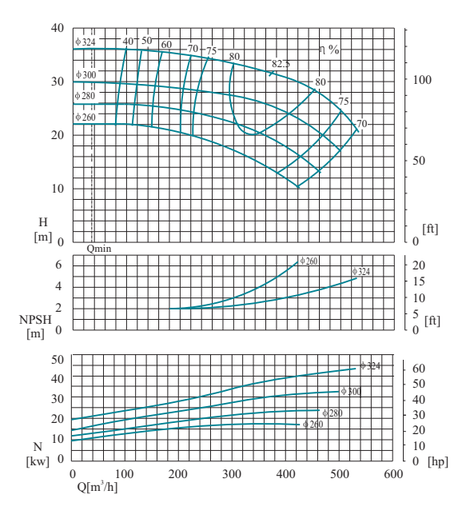


| 型号 Model | SLCZ150-400 | 转速 Speed | 1450r/min |
|---|---|---|---|
| 吸入口径 Suction | 200mm | 排出口径 Discharge | 150mm |

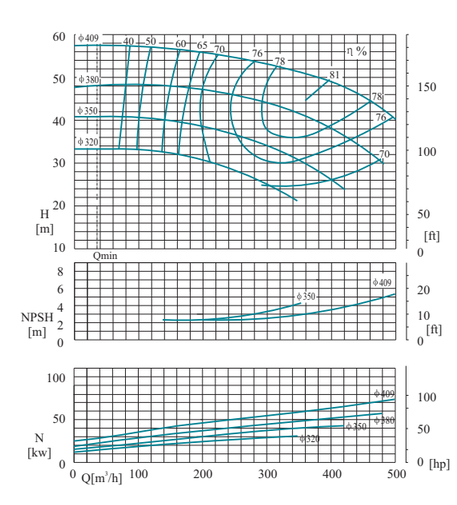

## 性能曲线图 Performance curve

| 型号 Model | SLCZ150-500 | 转速 Speed | 1450r/min |
|---|---|---|---|
| 吸入口径 Suction | 200mm | 排出口径 Discharge | 150mm |

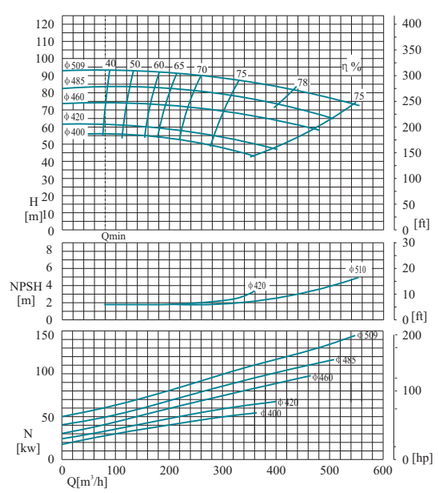


| 型号 Model | SLCZ200-250 | 转速 Speed | 1450r/min |
|---|---|---|---|
| 吸入口径 Suction | 200mm | 排出口径 Discharge | 200mm |

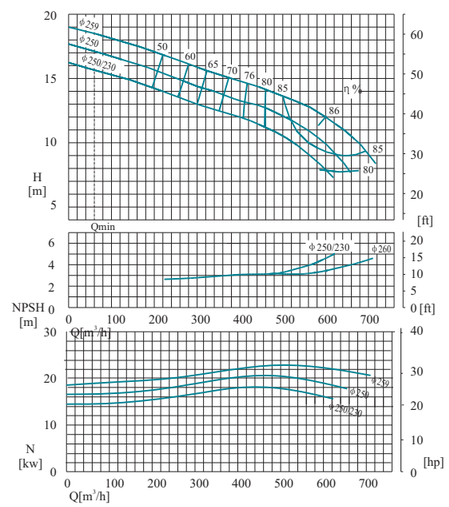


| 型号 Model | SLCZ200-315 | 转速 Speed | 1450r/min |
|---|---|---|---|
| 吸入口径 Suction | 250mm | 排出口径 Discharge | 200mm |

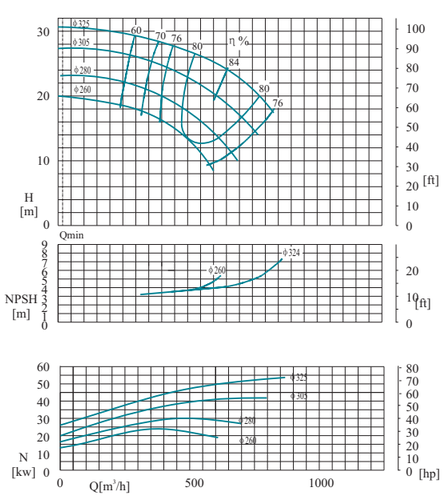


| 型号 Model | SLCZ200-400 | 转速 Speed | 1470r/min |
|---|---|---|---|
| 吸入口径 Suction | 250mm | 排出口径 Discharge | 200mm |

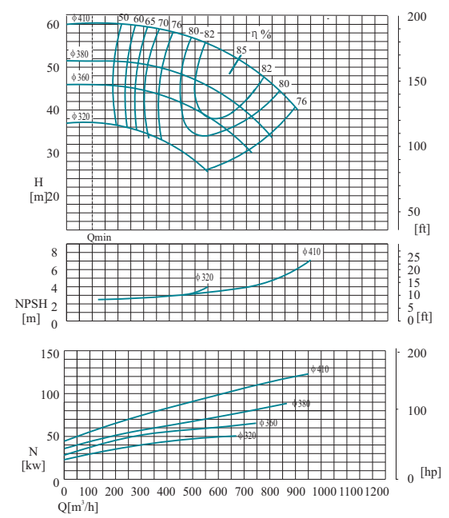






## 性能曲线图 Performance curve

| 型号 Model | SLCZ200-500 | 转速 Speed | 1450r/min |
|---|---|---|---|
| 吸入口径 Suction | 250mm | 排出口径 Discharge | 200mm |

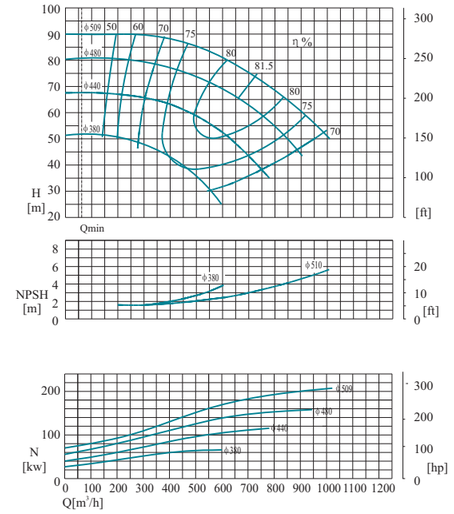


| 型号 Model | SLCZ250-315 | 转速 Speed | 1450r/min |
|---|---|---|---|
| 吸入口径 Suction | 300mm | 排出口径 Discharge | 250mm |

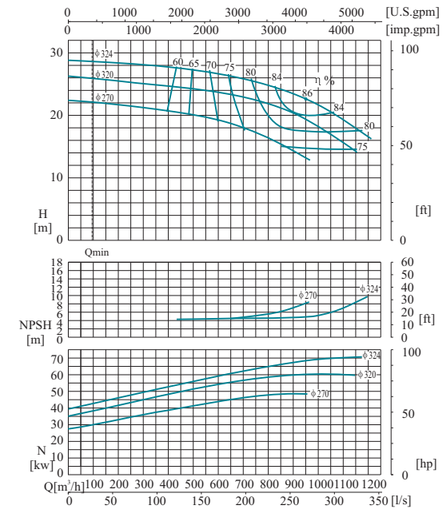


| 型号 Model | SLCZ250-400 | 转速 Speed | 1450r/min |
|---|---|---|---|
| 吸入口径 Suction | 300mm | 排出口径 Discharge | 250mm |

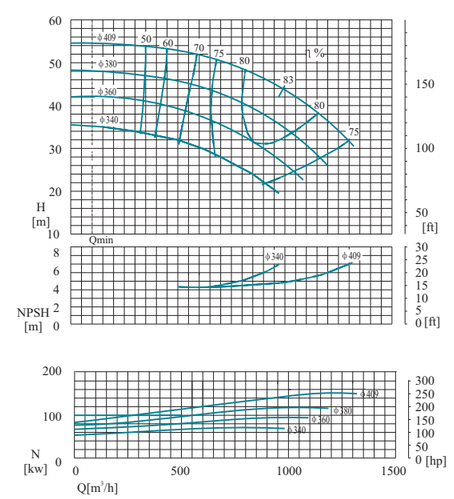


| 型号 Model | SLCZ250-500 | 转速 Speed | 1470r/min |
|---|---|---|---|
| 吸入口径 Suction | 300mm | 排出口径 Discharge | 250mm |

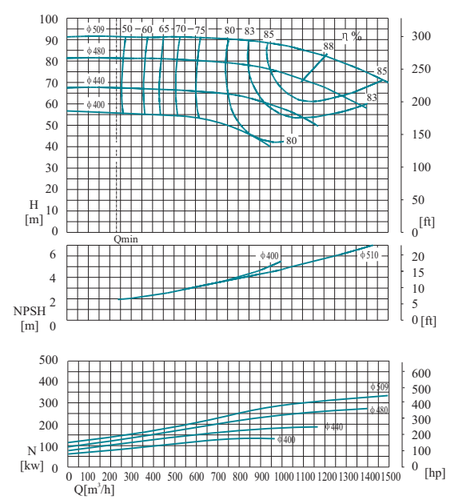

## 性能曲线图 Performance curve

| 型号 Model | SLCZ300-400 | 转速 Speed | 1480r/min |
|---|---|---|---|
| 吸入口径 Suction | 350mm | 排出口径 Discharge | 300mm |

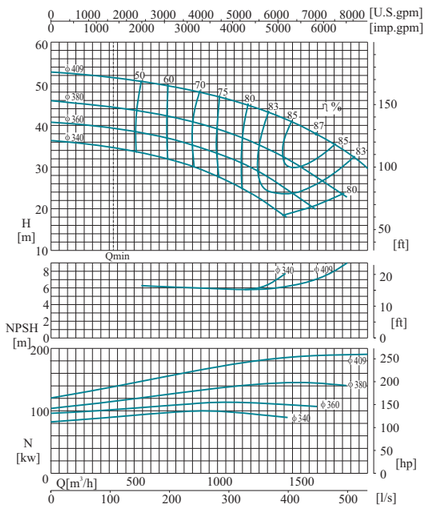


| 型号 Model | SLCZ300-500 | 转速 Speed | 1480r/min |
|---|---|---|---|
| 吸入口径 Suction | 350mm | 排出口径 Discharge | 300mm |

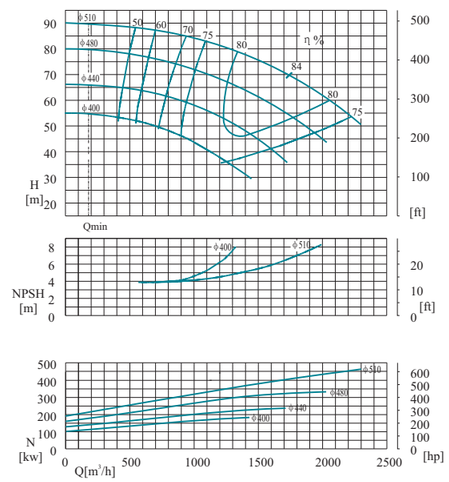




## 外形及安装尺寸图 External form and installation dimension drawing

SLCZ32-160型泵 Type pump

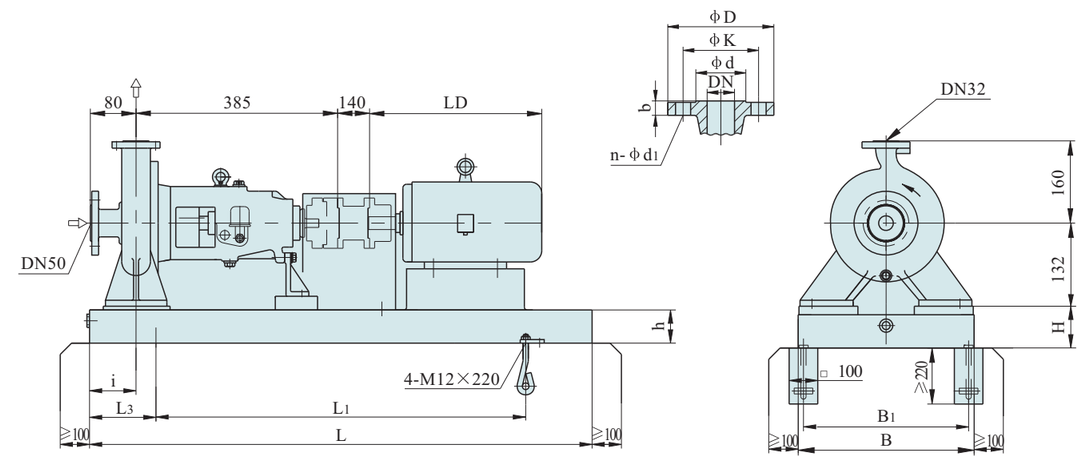


| 机座号 Foundation No. | 尺寸 Dimension (mm) | | | | | | | | | | 近似重量 Approximate weight (kg) | | | | |
|---|---|---|---|---|---|---|---|---|---|---|---|---|---|---|---|
| | L | $L_1$ | $L_2$ | $L_3$ | B | $B_1$ | h | H | i | LD | 泵 Pump | 电机 Motor | 底座 Found-ation | 其它 Other | 总重 Total weight |
| 90S | 900 | 600 | | 150 | 390 | 350 | 110 | 125 | 75 | | 44 | 31 | 37 | 20 | |
| 90L | 900 | 600 | | 150 | 390 | 350 | 110 | 125 | 75 | | | 37 | 37 | 20 | |
| 100L | 900 | 600 | | 150 | 390 | 350 | 110 | 125 | 75 | | | 45 | 38 | 20 | |
| 112M | 900 | 600 | | 150 | 390 | 350 | 110 | 125 | 75 | | | 53 | 39 | 20 | |
| 132S | 1000 | 660 | | 170 | 390 | 350 | 110 | 125 | 75 | | | 84 | 42 | 20 | |

| 法兰尺寸 Flange dimension | | | | | | | | | | | | |
|---|---|---|---|---|---|---|---|---|---|---|---|---|
| 执行标准 Adopted standard | | | | | | | | | | | | |
| GB9113.1-2000 PN2.5MPa | | | | | | | ANSI B16.5 CLASS 150Lb RF (取整) | | | | | |
| 名称 Name | DN | ϕD | b | ϕK | ϕd | n-ϕd1 | DN | ϕD | b | ϕK | ϕd | n-ϕd1 |
| 泵进口法兰 Pump inlet flange | 50 | 165 | 20 | 125 | 99 | 4-ϕ18 | 50 | 152 | 19 | 120.5 | 92 | 4-ϕ19 |
| 泵出口法兰 Pump outlet flange | 32 | 140 | 18 | 100 | 76 | 4-ϕ18 | 32 | 117 | 16 | 89 | 63.5 | 4-ϕ16 |

## 外形及安装尺寸图 External form and installation dimension drawing

SLCZ32-200型泵 Type pump

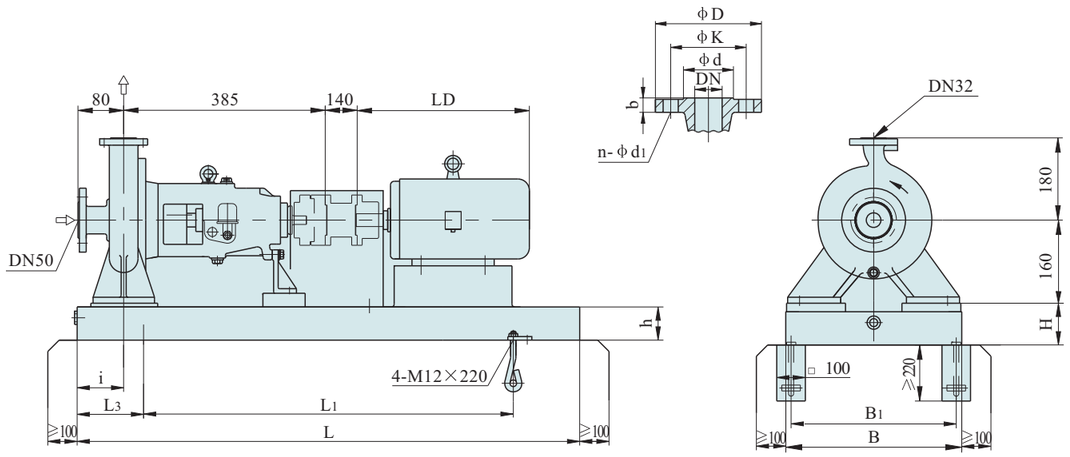


| 机座号 Foundation No. | 尺寸 Dimension (mm) | | | | | | | | | | 近似重量 Approximate weight (kg) | | | | |
|---|---|---|---|---|---|---|---|---|---|---|---|---|---|---|---|
| | L | L1 | L2 | L3 | B | B1 | h | H | i | LD | 泵 Pump | 电机 Motor | 底座 Found-ation | 其它 Other | 总重 Total weight |
| 90S | 900 | 600 | | 150 | 390 | 350 | 110 | 125 | 75 | | 50 | 31 | 40 | 20 | |
| 90L | 900 | 600 | | 150 | 390 | 350 | 110 | 125 | 75 | | | 37 | 40 | 20 | |
| 100L | 900 | 600 | | 150 | 390 | 350 | 110 | 125 | 75 | | | 45 | 41 | 20 | |
| 112M | 900 | 600 | | 150 | 390 | 350 | 110 | 125 | 75 | | | 53 | 40 | 20 | |
| 132S | 1000 | 660 | | 170 | 390 | 350 | 110 | 125 | 75 | | | 84 | 43 | 20 | |
| 160M | 1120 | 740 | | 190 | 390 | 350 | 110 | 125 | 75 | | | 150 | 45 | 20 | |

| 法兰尺寸 Flange dimension | | | | | | | | | | | | |
|---|---|---|---|---|---|---|---|---|---|---|---|---|
| 执行标准 Adopted standard | | | | | | | | | | | | |
| GB9113.1-2000 PN2.5MPa | | | | | | | ANSI B16.5 CLASS 150Lb RF (取整) | | | | | |
| 名称 Name | DN | ϕD | b | ϕK | ϕd | n-ϕd1 | DN | ϕD | b | ϕK | ϕd | n-ϕd1 |
| 泵进口法兰 Pump inlet flange | 50 | 165 | 20 | 125 | 99 | 4-ϕ18 | 50 | 152 | 19 | 120.5 | 92 | 4-ϕ19 |
| 泵出口法兰 Pump outlet flange | 32 | 140 | 18 | 100 | 76 | 4-ϕ18 | 32 | 117 | 16 | 89 | 63.5 | 4-ϕ16 |





## 外形及安装尺寸图 External form and installation dimension drawing

SLCZ32-250型泵 Type pump

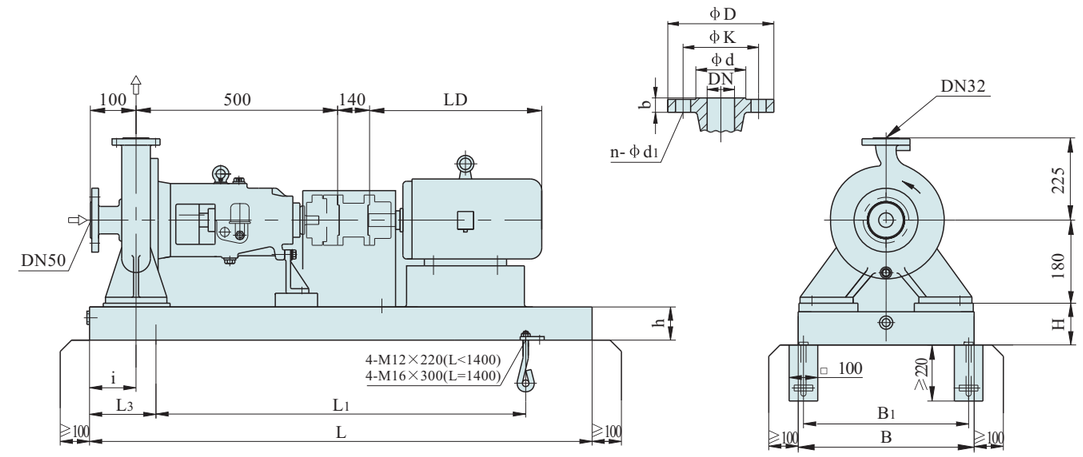


| 机座号 Foundation No. | 尺寸 Dimension (mm) | | | | | | | | | | 近似重量 Approximate weight (kg) | | | | |
|---|---|---|---|---|---|---|---|---|---|---|---|---|---|---|---|
| | L | L1 | L2 | L3 | B | B1 | h | H | i | LD | 泵 Pump | 电机 Motor | 底座 Found-ation | 其它 Other | 总重 Total weight |
| 90S | 1000 | 660 | | 170 | 390 | 350 | 110 | 125 | 90 | | 84 | 31 | 41 | 20 | |
| 90L | 1000 | 660 | | 170 | 390 | 350 | 110 | 125 | 90 | | | 37 | 41 | 20 | |
| 100L | 1120 | 740 | | 190 | 390 | 350 | 110 | 125 | 90 | | | 45 | 47 | 20 | |
| 112M | 1120 | 740 | | 190 | 390 | 350 | 110 | 125 | 90 | | | 53 | 48 | 20 | |
| 132M | 1120 | 740 | | 190 | 390 | 350 | 110 | 125 | 90 | | | 84 | 48 | 20 | |
| 132S | 1120 | 740 | | 190 | 390 | 350 | 110 | 125 | 90 | | | 101 | 48 | 20 | |
| 160M | 1250 | 840 | | 205 | 390 | 350 | 110 | 125 | 90 | | | 150 | 48 | 20 | |
| 160L | 1250 | 840 | | 205 | 390 | 350 | 110 | 125 | 90 | | | 170 | 49 | 20 | |
| 180M | 1400 | 940 | | 230 | 390 | 350 | 100 | 140 | 95 | | | 225 | 48 | 20 | |
| 200L | 1400 | 940 | | 230 | 440 | 400 | 115 | 170 | 95 | | | 300 | 61 | 20 | |

| 法兰尺寸 Flange dimension | | | | | | | | | | | | |
|---|---|---|---|---|---|---|---|---|---|---|---|---|
| 执行标准 Adopted standard | | | | | | | | | | | | |
| GB9113.1-2000 PN2.5MPa | | | | | | | ANSI B16.5 CLASS 150Lb RF (取整) | | | | | |
| 名称 Name | DN | ϕD | b | ϕK | ϕd | n-ϕd1 | DN | ϕD | b | ϕK | ϕd | n-ϕd1 |
| 泵进口法兰 Pump inlet flange | 50 | 165 | 20 | 125 | 99 | 4-ϕ18 | 50 | 152 | 19 | 120.5 | 92 | 4-ϕ19 |
| 泵出口法兰 Pump outlet flange | 32 | 140 | 18 | 100 | 76 | 4-ϕ18 | 32 | 117 | 16 | 89 | 63.5 | 4-ϕ16 |

## 外形及安装尺寸图 External form and installation dimension drawing

SLCZ40-160型泵 Type pump

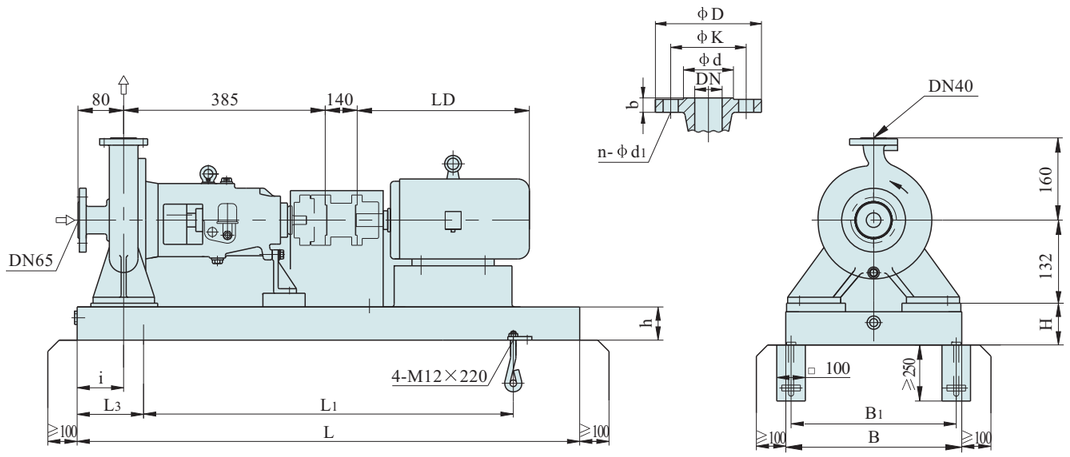


| 机座号 Foundation No. | 尺寸 Dimension (mm) | | | | | | | | | | 近似重量 Approximate weight (kg) | | | | |
|---|---|---|---|---|---|---|---|---|---|---|---|---|---|---|---|
| | L | L1 | L2 | L3 | B | B1 | h | H | i | LD | 泵 Pump | 电机 Motor | 底座 Found-ation | 其它 Other | 总重 Total weight |
| 90S | 900 | 600 | | 150 | 390 | 350 | 110 | 125 | 75 | | 46 | 31 | 37 | 20 | |
| 90L | 900 | 600 | | 150 | 390 | 350 | 110 | 125 | 75 | | | 37 | 37 | 20 | |
| 100L | 900 | 600 | | 150 | 390 | 350 | 110 | 125 | 75 | | | 45 | 38 | 20 | |
| 112M | 900 | 600 | | 150 | 390 | 350 | 110 | 125 | 75 | | | 53 | 39 | 20 | |
| 132S | 1000 | 660 | | 170 | 390 | 350 | 110 | 125 | 75 | | | 84 | 42 | 20 | |
| 160M | 1120 | 740 | | 190 | 390 | 350 | 110 | 125 | 75 | | | 150 | 45 | 20 | |

| 法兰尺寸 Flange dimension | | | | | | | | | | | | |
|---|---|---|---|---|---|---|---|---|---|---|---|---|
| 执行标准 Adopted standard | | | | | | | | | | | | |
| GB9113.1-2000 PN2.5MPa | | | | | | | ANSI B16.5 CLASS 150Lb RF (取整) | | | | | |
| 名称 Name | DN | ϕD | b | ϕK | ϕd | n-ϕd1 | DN | ϕD | b | ϕK | ϕd | n-ϕd1 |
| 泵进口法兰 Pump inlet flange | 65 | 185 | 22 | 145 | 118 | 8-ϕ18 | 65 | 178 | 22 | 139.5 | 105 | 4-ϕ19 |
| 泵出口法兰 Pump outlet flange | 40 | 150 | 18 | 110 | 84 | 4-ϕ18 | 40 | 127 | 17.5 | 98.5 | 73 | 4-ϕ16 |





## 外形及安装尺寸图 External form and installation dimension drawing

SLCZ40-200型泵 Type pump

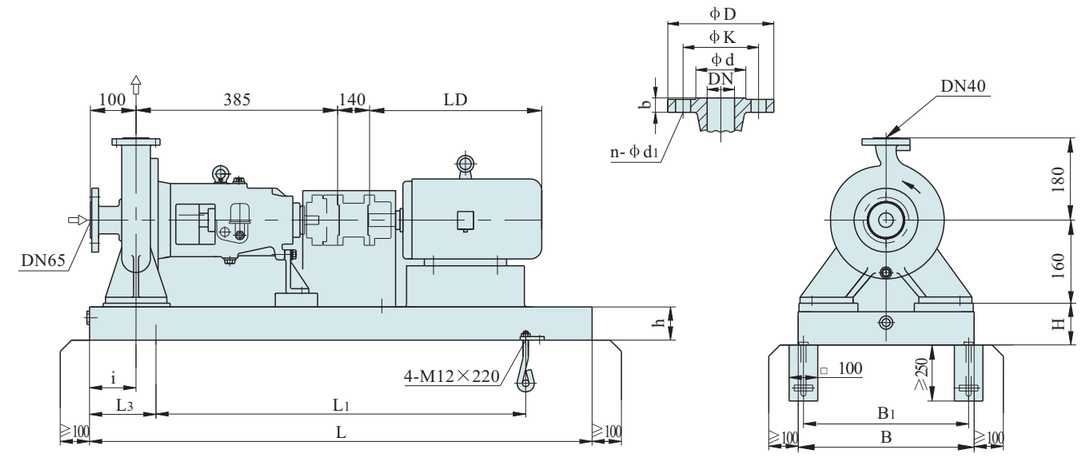


| 机座号 Foundation No. | 尺寸 Dimension (mm) | | | | | | | | | | 近似重量 Approximate weight (kg) | | | | |
|---|---|---|---|---|---|---|---|---|---|---|---|---|---|---|---|
| | L | L1 | L2 | L3 | B | B1 | h | H | i | LD | 泵 Pump | 电机 Motor | 底座 Found-ation | 其它 Other | 总重 Total weight |
| 90S | 900 | 600 | | 150 | 390 | 350 | 110 | 125 | 75 | | 55 | 31 | 38 | 20 | |
| 90L | 900 | 600 | | 150 | 390 | 350 | 110 | 125 | 75 | | | 37 | 39 | 20 | |
| 100L | 900 | 600 | | 150 | 390 | 350 | 110 | 125 | 75 | | | 45 | 39 | 20 | |
| 112M | 900 | 600 | | 150 | 390 | 350 | 110 | 125 | 75 | | | 53 | 39 | 20 | |
| 132S | 1000 | 660 | | 170 | 390 | 350 | 110 | 125 | 75 | | | 84 | 41 | 20 | |
| 160M | 1120 | 740 | | 190 | 390 | 350 | 110 | 125 | 75 | | | 150 | 44 | 20 | |
| 160L | 1120 | 740 | | 190 | 390 | 350 | 110 | 125 | 75 | | | 170 | 44 | 20 | |

| 法兰尺寸 Flange dimension | | | | | | | | | | | | |
|---|---|---|---|---|---|---|---|---|---|---|---|---|
| 执行标准 Adopted standard | | | | | | | | | | | | |
| GB9113.1-2000 PN2.5MPa | | | | | | | ANSI B16.5 CLASS 150Lb RF (取整) | | | | | |
| 名称 Name | DN | ϕD | b | ϕK | ϕd | n-ϕd1 | DN | ϕD | b | ϕK | ϕd | n-ϕd1 |
| 泵进口法兰 Pump inlet flange | 65 | 185 | 22 | 145 | 118 | 8-ϕ18 | 65 | 178 | 22 | 139.5 | 105 | 4-ϕ19 |
| 泵出口法兰 Pump outlet flange | 40 | 150 | 18 | 110 | 84 | 4-ϕ18 | 40 | 127 | 17.5 | 98.5 | 73 | 4-ϕ16 |

## 外形及安装尺寸图 External form and installation dimension drawing

SLCZ40-250型泵 Type pump

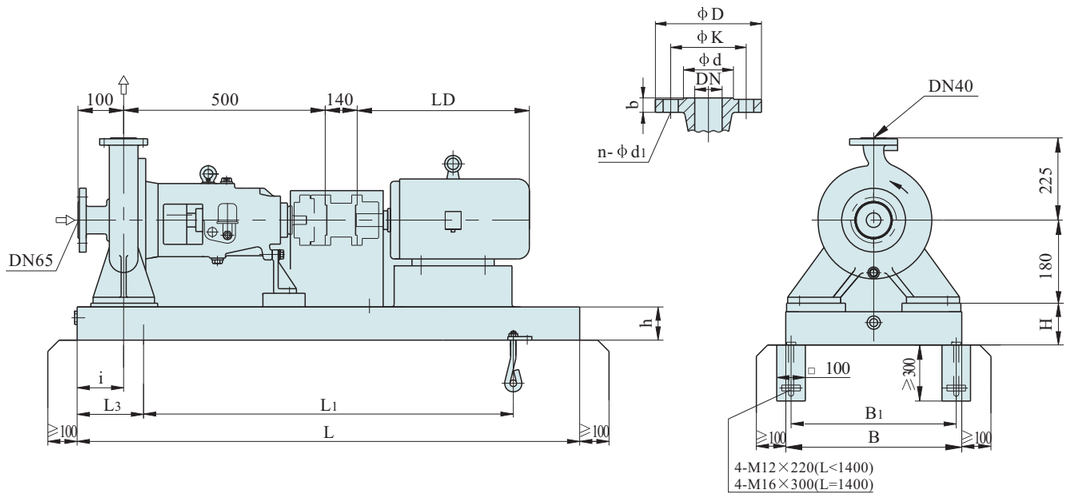


| 机座号 Foundation No. | 尺寸 Dimension (mm) | | | | | | | | | | 近似重量 Approximate weight (kg) | | | | |
|---|---|---|---|---|---|---|---|---|---|---|---|---|---|---|---|
| | L | $L_1$ | $L_2$ | $L_3$ | B | $B_1$ | h | H | i | LD | 泵 Pump | 电机 Motor | 底座 Found-ation | 其它 Other | 总重 Total weight |
| 90S | 1000 | 660 | | 170 | 390 | 350 | 110 | 125 | 90 | | 83 | 31 | 41 | 20 | |
| 90L | 1000 | 660 | | 170 | 390 | 350 | 110 | 125 | 90 | | | 37 | 41 | 20 | |
| 100L | 1120 | 740 | | 190 | 390 | 350 | 110 | 125 | 90 | | | 45 | 47 | 20 | |
| 112M | 1120 | 740 | | 190 | 390 | 350 | 110 | 125 | 90 | | | 53 | 48 | 20 | |
| 132S | 1120 | 740 | | 190 | 390 | 350 | 110 | 125 | 90 | | | 84 | 48 | 20 | |
| 160M | 1250 | 840 | | 205 | 390 | 350 | 110 | 125 | 90 | | | 150 | 48 | 20 | |
| 160L | 1250 | 840 | | 205 | 390 | 350 | 110 | 125 | 90 | | | 170 | 49 | 20 | |
| 180M | 1400 | 940 | | 230 | 390 | 350 | 110 | 125 | 95 | | | 225 | 48 | 20 | |
| 200L | 1400 | 940 | | 230 | 440 | 400 | 115 | 170 | 90 | | | 300 | 61 | 20 | |
| 225M | 1400 | 940 | | 230 | 530 | 490 | 115 | 170 | 90 | | | 440 | 70 | 20 | |

| 法兰尺寸 Flange dimension | | | | | | | | | | | | |
|---|---|---|---|---|---|---|---|---|---|---|---|---|
| 执行标准 Adopted standard | | | | | | | | | | | | |
| GB9113.1-2000 PN2.5MPa | | | | | | | ANSI B16.5 CLASS 150Lb RF (取整) | | | | | |
| 名称 Name | DN | ϕD | b | ϕK | ϕd | n-ϕd1 | DN | ϕD | b | ϕK | ϕd | n-ϕd1 |
| 泵进口法兰 Pump inlet flange | 65 | 185 | 22 | 145 | 118 | 8-ϕ18 | 65 | 178 | 22 | 139.5 | 105 | 4-ϕ19 |
| 泵出口法兰 Pump outlet flange | 40 | 150 | 18 | 110 | 84 | 4-ϕ18 | 40 | 127 | 17.5 | 98.5 | 73 | 4-ϕ16 |





## 外形及安装尺寸图 External form and installation dimension drawing

SLCZ40-315型泵 Type pump

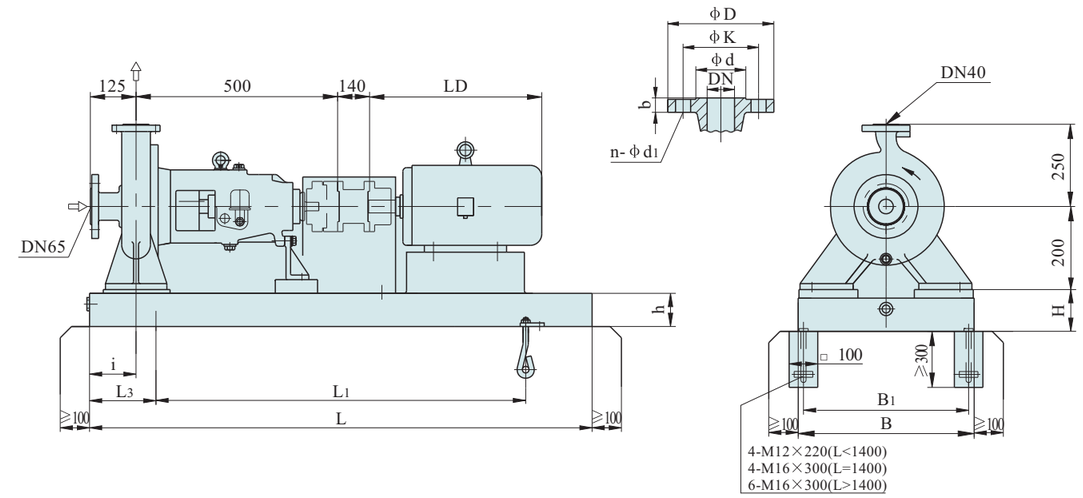


| 机座号 Foundation No. | 尺寸 Dimension (mm) | | | | | | | | | | 近似重量 Approximate weight (kg) | | | | |
|---|---|---|---|---|---|---|---|---|---|---|---|---|---|---|---|
| | L | $L_1$ | $L_2$ | $L_3$ | B | $B_1$ | h | H | i | LD | 泵 Pump | 电机 Motor | 底座 Found-ation | 其它 Other | 总重 Total weight |
| 112M | 1120 | 740 | | 190 | 390 | 350 | 110 | 125 | 90 | | 111 | 53 | 46 | 20 | |
| 132S | 1120 | 740 | | 190 | 390 | 350 | 110 | 125 | 90 | | | 84 | 46 | 20 | |
| 160M | 1250 | 840 | | 205 | 390 | 350 | 110 | 125 | 90 | | | 150 | 50 | 20 | |
| 160L | 1250 | 840 | | 205 | 390 | 350 | 110 | 125 | 90 | | | 170 | 50 | 20 | |
| 180M | 1400 | 940 | | 230 | 390 | 350 | 110 | 140 | 100 | | | 225 | 54 | 20 | |
| 200L | 1400 | 940 | | 230 | 440 | 400 | 115 | 140 | 90 | | | 300 | 55 | 20 | |
| 225M | 1400 | 940 | | 230 | 530 | 490 | 125 | 170 | 90 | | | 440 | 55 | 20 | |
| 250M | 1600 | 1060 | 530 | 270 | 600 | 550 | 120 | 190 | 90 | | | 510 | 87 | 20 | |

| 法兰尺寸 Flange dimension | | | | | | | | | | | | |
|---|---|---|---|---|---|---|---|---|---|---|---|---|
| 执行标准 Adopted standard | | | | | | | | | | | | |
| GB9113.1-2000 PN2.5MPa | | | | | | | ANSI B16.5 CLASS 150Lb RF (取整) | | | | | |
| 名称 Name | DN | ϕD | b | ϕK | ϕd | n-ϕd1 | DN | ϕD | b | ϕK | ϕd | n-ϕd1 |
| 泵进口法兰 Pump inlet flange | 65 | 185 | 22 | 145 | 118 | 8-ϕ18 | 65 | 178 | 22 | 139.5 | 105 | 4-ϕ19 |
| 泵出口法兰 Pump outlet flange | 40 | 150 | 18 | 110 | 84 | 4-ϕ18 | 40 | 127 | 17.5 | 98.5 | 73 | 4-ϕ16 |

## 外形及安装尺寸图 External form and installation dimension drawing

SLCZ50-160型泵 Type pump

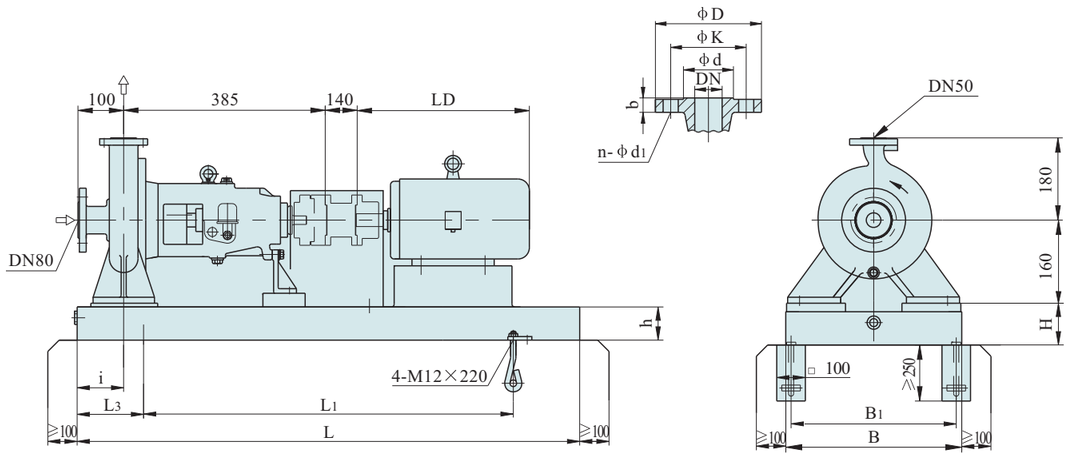


| 机座号 Foundation No. | 尺寸 Dimension (mm) | | | | | | | | | | 近似重量 Approximate weight (kg) | | | | |
|---|---|---|---|---|---|---|---|---|---|---|---|---|---|---|---|
| | L | L1 | L2 | L3 | B | B1 | h | H | i | LD | 泵 Pump | 电机 Motor | 底座 Found-ation | 其它 Other | 总重 Total weight |
| 90S | 900 | 600 | | 150 | 390 | 350 | 110 | 125 | 75 | | 49 | 31 | 38 | 20 | |
| 90L | 900 | 600 | | 150 | 390 | 350 | 110 | 125 | 75 | | | 37 | 39 | 20 | |
| 100L | 900 | 600 | | 150 | 390 | 350 | 110 | 125 | 75 | | | 45 | 39 | 20 | |
| 112M | 900 | 600 | | 150 | 390 | 350 | 110 | 125 | 75 | | | 53 | 39 | 20 | |
| 132S | 1000 | 660 | | 170 | 390 | 350 | 110 | 125 | 75 | | | 84 | 41 | 20 | |
| 160M | 1120 | 740 | | 190 | 390 | 350 | 110 | 125 | 75 | | | 150 | 44 | 20 | |
| 160L | 1120 | 740 | | 190 | 390 | 350 | 110 | 125 | 75 | | | 170 | 44 | 20 | |

| 法兰尺寸 Flange dimension | | | | | | | | | | | | |
|---|---|---|---|---|---|---|---|---|---|---|---|---|
| 执行标准 Adopted standard | | | | | | | | | | | | |
| GB9113.1-2000 PN2.5MPa | | | | | | | ANSI B16.5 CLASS 150Lb RF (取整) | | | | | |
| 名称 Name | DN | ϕD | b | ϕK | ϕd | n-ϕd1 | DN | ϕD | b | ϕK | ϕd | n-ϕd1 |
| 泵进口法兰 Pump inlet flange | 80 | 200 | 24 | 160 | 132 | 8-ϕ18 | 80 | 190.5 | 24 | 152.5 | 127 | 4-ϕ19 |
| 泵出口法兰 Pump outlet flange | 50 | 165 | 20 | 125 | 99 | 4-ϕ18 | 50 | 152 | 19 | 120.5 | 92 | 4-ϕ19 |





## 外形及安装尺寸图 External form and installation dimension drawing

SLCZ50-200型泵 Type pump

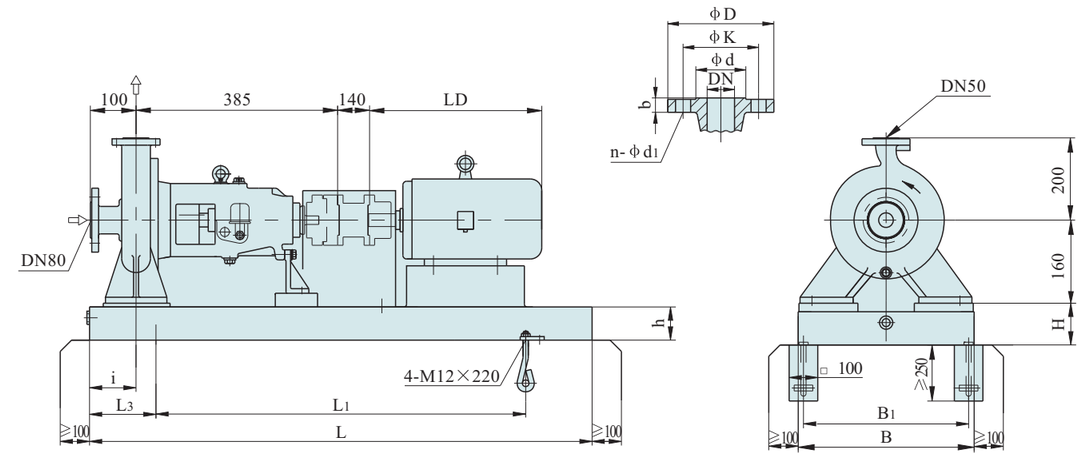


| 机座号 Foundation No. | 尺寸 Dimension (mm) | | | | | | | | | | 近似重量 Approximate weight (kg) | | | | |
|---|---|---|---|---|---|---|---|---|---|---|---|---|---|---|---|
| | L | L1 | L2 | L3 | B | B1 | h | H | i | LD | 泵 Pump | 电机 Motor | 底座 Found-ation | 其它 Other | 总重 Total weight |
| 90S | 900 | 600 | | 150 | 390 | 350 | 110 | 125 | 75 | | 55 | 31 | 38 | 20 | |
| 90L | 900 | 600 | | 150 | 390 | 350 | 110 | 125 | 75 | | | 37 | 39 | 20 | |
| 100M | 900 | 600 | | 150 | 390 | 350 | 110 | 125 | 75 | | | 45 | 39 | 20 | |
| 112M | 900 | 600 | | 150 | 390 | 350 | 110 | 125 | 75 | | | 53 | 39 | 20 | |
| 132S | 1000 | 660 | | 170 | 390 | 350 | 110 | 125 | 75 | | | 84 | 41 | 20 | |
| 160M | 1120 | 740 | | 190 | 390 | 350 | 110 | 125 | 75 | | | 150 | 44 | 20 | |
| 160L | 1120 | 740 | | 190 | 390 | 350 | 110 | 125 | 75 | | | 170 | 44 | 20 | |
| 180M | 1250 | 840 | | 205 | 390 | 350 | 110 | 125 | 75 | | | 225 | 45 | 20 | |

| 法兰尺寸 Flange dimension | | | | | | | | | | | | |
|---|---|---|---|---|---|---|---|---|---|---|---|---|
| 执行标准 Adopted standard | | | | | | | | | | | | |
| GB9113.1-2000 PN2.5MPa | | | | | | | ANSI B16.5 CLASS 150Lb RF (取整) | | | | | |
| 名称 Name | DN | ϕD | b | ϕK | ϕd | n-ϕd1 | DN | ϕD | b | ϕK | ϕd | n-ϕd1 |
| 泵进口法兰 Pump inlet flange | 80 | 200 | 24 | 160 | 132 | 8-ϕ18 | 80 | 190.5 | 24 | 152.5 | 127 | 4-ϕ19 |
| 泵出口法兰 Pump outlet flange | 50 | 165 | 20 | 125 | 99 | 4-ϕ18 | 50 | 152 | 19 | 120.5 | 92 | 4-ϕ19 |

## 外形及安装尺寸图 External form and installation dimension drawing

SLCZ50-250型泵 Type pump

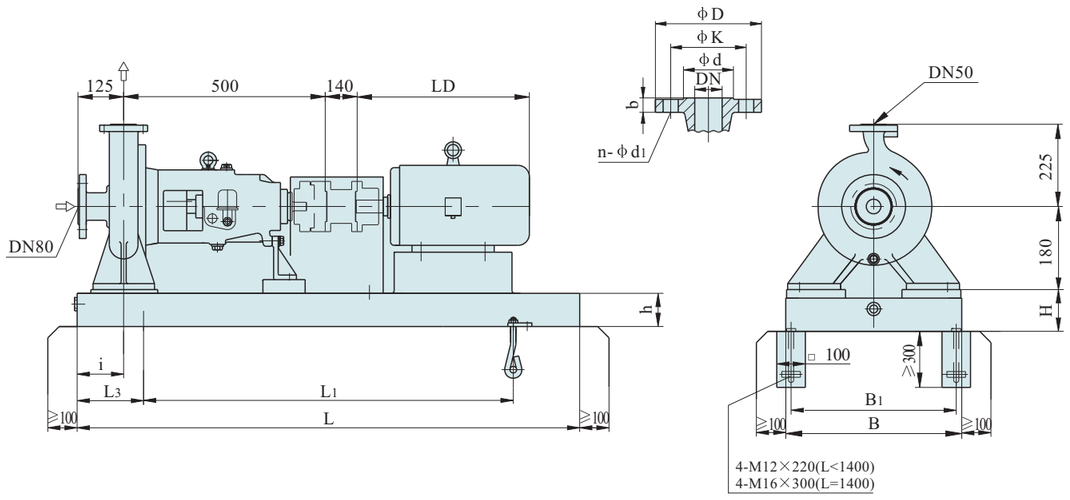


| 机座号 Foundation No. | 尺寸 Dimension (mm) | | | | | | | | | | 近似重量 Approximate weight (kg) | | | | |
|---|---|---|---|---|---|---|---|---|---|---|---|---|---|---|---|
| | L | $L_1$ | $L_2$ | $L_3$ | B | $B_1$ | h | H | i | LD | 泵 Pump | 电机 Motor | 底座 Found-ation | 其它 Other | 总重 Total weight |
| 90S | 1000 | 660 | | 170 | 390 | 350 | 110 | 125 | 90 | | 85 | 31 | 41 | 20 | |
| 90L | 1000 | 660 | | 170 | 390 | 350 | 110 | 125 | 90 | | | 37 | 43 | 20 | |
| 100L | 1120 | 740 | | 190 | 390 | 350 | 110 | 125 | 90 | | | 45 | 47 | 20 | |
| 112M | 1120 | 740 | | 190 | 390 | 350 | 110 | 125 | 90 | | | 53 | 47 | 20 | |
| 132S | 1120 | 740 | | 190 | 390 | 350 | 110 | 125 | 90 | | | 84 | 47 | 20 | |
| 160M | 1250 | 840 | | 205 | 390 | 350 | 110 | 125 | 90 | | | 150 | 49 | 20 | |
| 160L | 1250 | 840 | | 205 | 390 | 350 | 110 | 125 | 90 | | | 170 | 51 | 20 | |
| 180M | 1400 | 940 | | 230 | 390 | 350 | 110 | 125 | 100 | | | 225 | 54 | 20 | |
| 200L | 1400 | 940 | | 230 | 440 | 400 | 115 | 170 | 90 | | | 300 | 64 | 20 | |
| 225M | 1400 | 940 | | 230 | 530 | 490 | 115 | 170 | 90 | | | 440 | 64 | 20 | |

| 法兰尺寸 Flange dimension | | | | | | | | | | | | |
|---|---|---|---|---|---|---|---|---|---|---|---|---|
| 执行标准 Adopted standard | | | | | | | | | | | | |
| GB9113.1-2000 PN2.5MPa | | | | | | | ANSI B16.5 CLASS 150Lb RF (取整) | | | | | |
| 名称 Name | DN | ϕD | b | ϕK | ϕd | n-ϕd1 | DN | ϕD | b | ϕK | ϕd | n-ϕd1 |
| 泵进口法兰 Pump inlet flange | 80 | 200 | 24 | 160 | 132 | 8-ϕ18 | 80 | 190.5 | 24 | 152.5 | 127 | 4-ϕ19 |
| 泵出口法兰 Pump outlet flange | 50 | 165 | 20 | 125 | 99 | 4-ϕ18 | 50 | 152 | 19 | 120.5 | 92 | 4-ϕ19 |





## 外形及安装尺寸图 External form and installation dimension drawing

SLCZ50-315型泵 Type pump

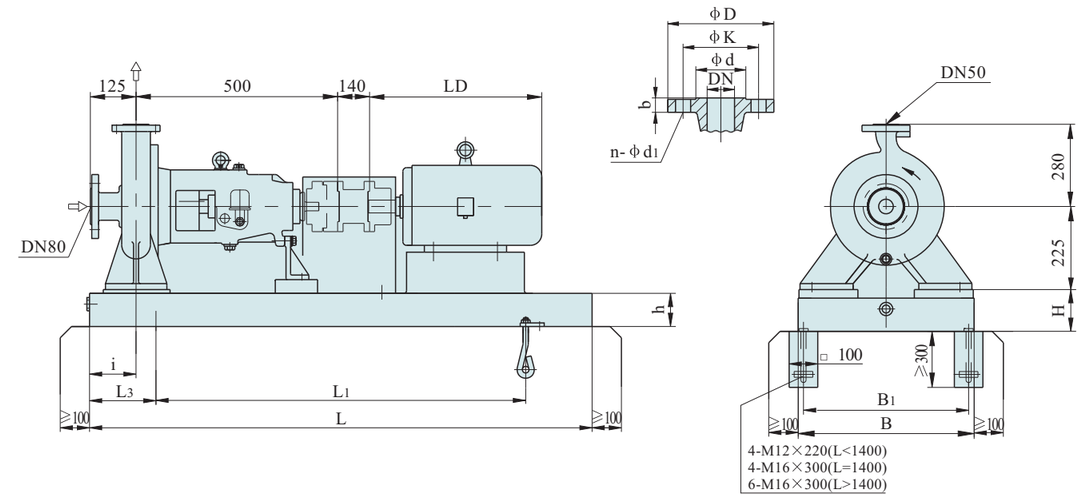


| 机座号 Foundation No. | 尺寸 Dimension (mm) | | | | | | | | | | 近似重量 Approximate weight (kg) | | | | |
|---|---|---|---|---|---|---|---|---|---|---|---|---|---|---|---|
| | L | $L_1$ | $L_2$ | $L_3$ | B | $B_1$ | h | H | i | LD | 泵 Pump | 电机 Motor | 底座 Found-ation | 其它 Other | 总重 Total weight |
| 132S | 1120 | 740 | | 190 | 390 | 350 | 110 | 125 | 90 | | 115 | 84 | 49 | 20 | |
| 160M | 1250 | 840 | | 205 | 390 | 350 | 110 | 125 | 90 | | | 150 | 52 | 20 | |
| 160L | 1250 | 840 | | 205 | 390 | 350 | 110 | 125 | 90 | | | 170 | 53 | 20 | |
| 180M | 1400 | 940 | | 230 | 390 | 350 | 110 | 140 | 100 | | | 225 | 59 | 20 | |
| 200L | 1400 | 940 | | 230 | 440 | 400 | 115 | 170 | 90 | | | 300 | 68 | 20 | |
| 225M | 1400 | 940 | | 230 | 530 | 490 | 125 | 170 | 90 | | | 440 | 73 | 20 | |
| 250M | 1600 | 1060 | 530 | 270 | 600 | 550 | 120 | 190 | 90 | | | 510 | 95 | 20 | |
| 280S | 1600 | 1060 | 530 | 270 | 650 | 600 | 145 | 230 | 90 | | | 650 | 128 | 20 | |
| 280M | 1600 | 1060 | 530 | 270 | 650 | 600 | 145 | 230 | 90 | | | 800 | 128 | 20 | |

| 法兰尺寸 Flange dimension | | | | | | | | | | | | |
|---|---|---|---|---|---|---|---|---|---|---|---|---|
| 执行标准 Adopted standard | | | | | | | | | | | | |
| GB9113.1-2000 PN2.5MPa | | | | | | | ANSI B16.5 CLASS 150Lb RF (取整) | | | | | |
| 名称 Name | DN | ϕD | b | ϕK | ϕd | n-ϕd1 | DN | ϕD | b | ϕK | ϕd | n-ϕd1 |
| 泵进口法兰 Pump inlet flange | 80 | 200 | 24 | 160 | 132 | 8-ϕ18 | 80 | 190.5 | 24 | 152.5 | 127 | 4-ϕ19 |
| 泵出口法兰 Pump outlet flange | 50 | 165 | 20 | 125 | 99 | 4-ϕ18 | 50 | 152 | 19 | 120.5 | 92 | 4-ϕ19 |

## 外形及安装尺寸图 External form and installation dimension drawing

SLCZ65-160型泵 Type pump

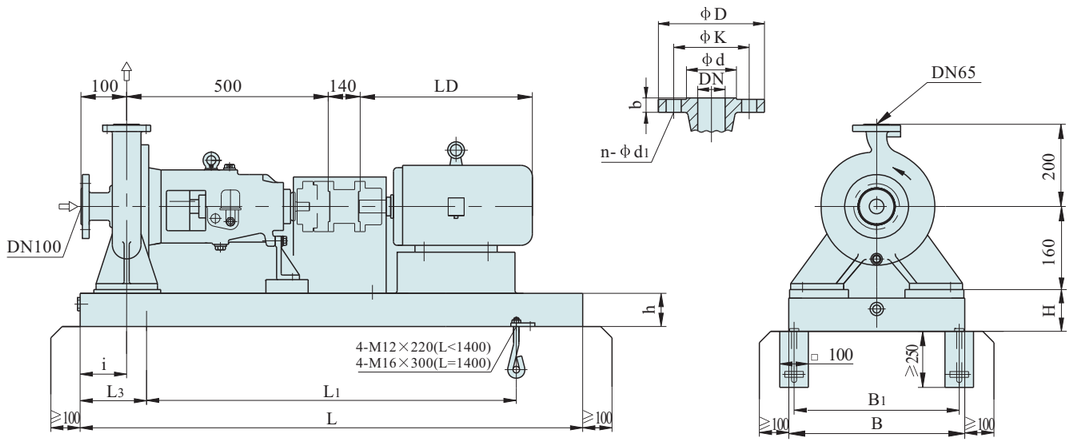


| 机座号 Foundation No. | 尺寸 Dimension (mm) | | | | | | | | | | 近似重量 Approximate weight (kg) | | | | |
|---|---|---|---|---|---|---|---|---|---|---|---|---|---|---|---|
| | L | L1 | L2 | L3 | B | B1 | h | H | i | LD | 泵 Pump | 电机 Motor | 底座 Found-ation | 其它 Other | 总重 Total weight |
| 90S | 1000 | 660 | | 170 | 390 | 350 | 110 | 125 | 90 | | 70 | 31 | 41 | 20 | |
| 90L | 1000 | 660 | | 170 | 390 | 350 | 110 | 125 | 90 | | | 37 | 42 | 20 | |
| 100L | 1120 | 740 | | 190 | 390 | 350 | 110 | 125 | 90 | | | 45 | 45 | 20 | |
| 112M | 1120 | 740 | | 190 | 390 | 350 | 110 | 125 | 90 | | | 53 | 45 | 20 | |
| 132S | 1120 | 740 | | 190 | 390 | 350 | 110 | 125 | 90 | | | 101 | 45 | 20 | |
| 160M | 1250 | 840 | | 205 | 390 | 350 | 110 | 125 | 90 | | | 150 | 48 | 20 | |
| 160L | 1250 | 840 | | 205 | 390 | 350 | 110 | 125 | 90 | | | 170 | 49 | 20 | |
| 180M | 1400 | 940 | | 230 | 390 | 350 | 110 | 170 | 100 | | | 225 | 59 | 20 | |

| 法兰尺寸 Flange dimension | | | | | | | | | | | | |
|---|---|---|---|---|---|---|---|---|---|---|---|---|
| 执行标准 Adopted standard | | | | | | | | | | | | |
| GB9113.1-2000 PN2.5MPa | | | | | | | ANSI B16.5 CLASS 150Lb RF (取整) | | | | | |
| 名称 Name | DN | ϕD | b | ϕK | ϕd | n-ϕd1 | DN | ϕD | b | ϕK | ϕd | n-ϕd1 |
| 泵进口法兰 Pump inlet flange | 100 | 235 | 24 | 190 | 156 | 8-ϕ22 | 100 | 228.5 | 24 | 190.5 | 157.5 | 8-ϕ19 |
| 泵出口法兰 Pump outlet flange | 65 | 185 | 22 | 145 | 118 | 8-ϕ18 | 65 | 178 | 22.5 | 139.5 | 105 | 4-ϕ19 |





## 外形及安装尺寸图 External form and installation dimension drawing

SLCZ65-200型泵 Type pump

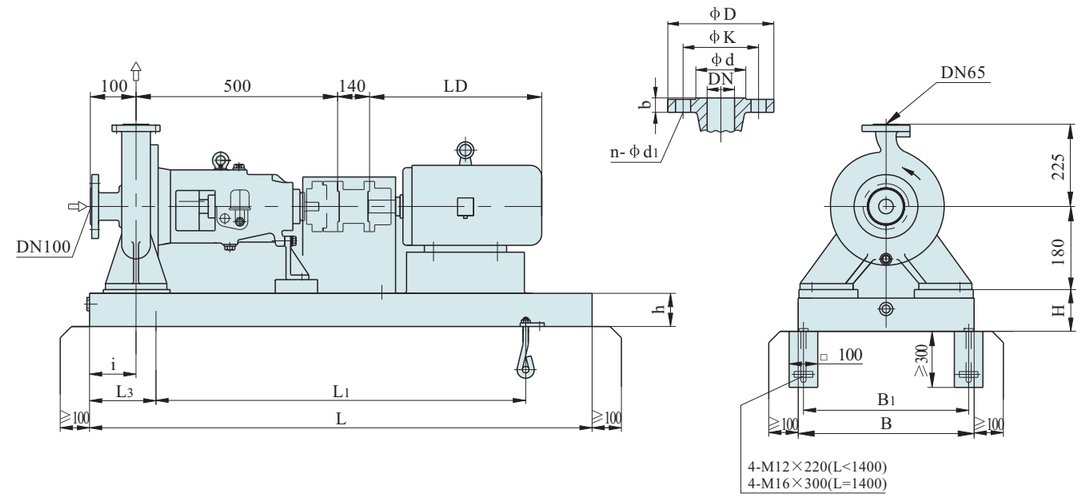


| 机座号 Foundation No. | 尺寸 Dimension (mm) | | | | | | | | | | 近似重量 Approximate weight (kg) | | | | |
|---|---|---|---|---|---|---|---|---|---|---|---|---|---|---|---|
| | L | L1 | L2 | L3 | B | B1 | h | H | i | LD | 泵 Pump | 电机 Motor | 底座 Found-ation | 其它 Other | 总重 Total weight |
| 90S | 1000 | 660 | | 170 | 390 | 350 | 110 | 125 | 90 | | 82 | 31 | 41 | 20 | |
| 90L | 1000 | 660 | | 170 | 390 | 350 | 110 | 125 | 90 | | | 37 | 43 | 20 | |
| 100L | 1120 | 740 | | 190 | 390 | 350 | 110 | 125 | 90 | | | 45 | 47 | 20 | |
| 112M | 1120 | 740 | | 190 | 390 | 350 | 110 | 125 | 90 | | | 53 | 47 | 20 | |
| 132S | 1120 | 740 | | 190 | 390 | 350 | 110 | 125 | 90 | | | 84 | 47 | 20 | |
| 160M | 1250 | 840 | | 205 | 390 | 350 | 110 | 125 | 90 | | | 150 | 49 | 20 | |
| 160L | 1250 | 840 | | 205 | 390 | 350 | 110 | 125 | 90 | | | 170 | 51 | 20 | |
| 180M | 1400 | 940 | | 230 | 390 | 350 | 110 | 140 | 100 | | | 225 | 54 | 20 | |
| 200L | 1400 | 940 | | 230 | 440 | 400 | 115 | 170 | 90 | | | 300 | 54 | 20 | |

| 法兰尺寸 Flange dimension | | | | | | | | | | | | |
|---|---|---|---|---|---|---|---|---|---|---|---|---|
| 执行标准 Adopted standard | | | | | | | | | | | | |
| GB9113.1-2000 PN2.5MPa | | | | | | | ANSI B16.5 CLASS 150Lb RF (取整) | | | | | |
| 名称 Name | DN | ϕD | b | ϕK | ϕd | n-ϕd1 | DN | ϕD | b | ϕK | ϕd | n-ϕd1 |
| 泵进口法兰 Pump inlet flange | 100 | 235 | 24 | 190 | 156 | 8-ϕ22 | 100 | 228.5 | 24 | 190.5 | 157.5 | 8-ϕ19 |
| 泵出口法兰 Pump outlet flange | 65 | 185 | 22 | 145 | 118 | 8-ϕ18 | 65 | 178 | 22.5 | 139.5 | 105 | 4-ϕ19 |

## 外形及安装尺寸图 External form and installation dimension drawing

SLCZ65-250型泵 Type pump

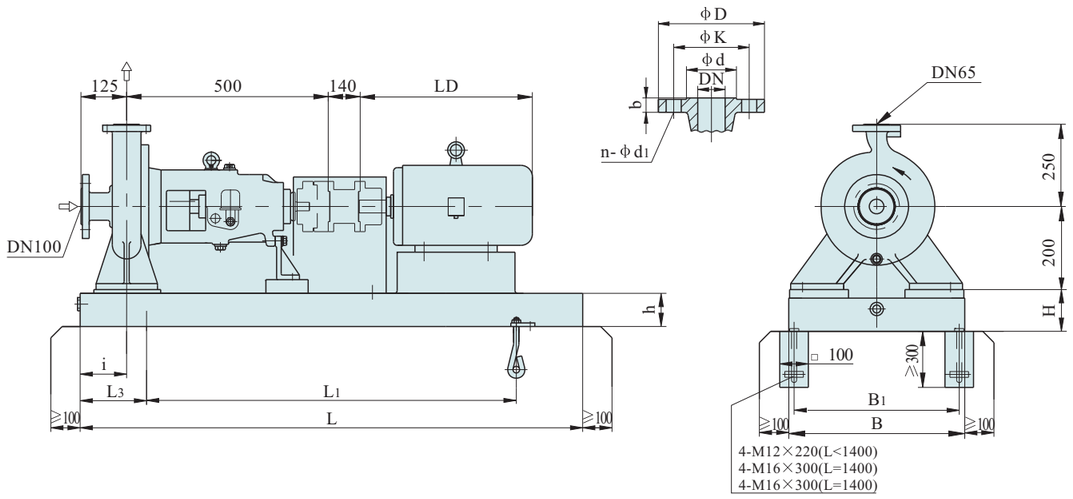


| 机座号 Foundation No. | 尺寸 Dimension (mm) | | | | | | | | | | 近似重量 Approximate weight (kg) | | | | |
|---|---|---|---|---|---|---|---|---|---|---|---|---|---|---|---|
| | L | $L_1$ | $L_2$ | $L_3$ | B | $B_1$ | h | H | i | LD | 泵 Pump | 电机 Motor | 底座 Found-ation | 其它 Other | 总重 Total weight |
| 112M | 1120 | 740 | | 190 | 390 | 350 | 110 | 125 | 105 | | 94 | 53 | 50 | 20 | |
| 132S | 1120 | 740 | | 190 | 390 | 350 | 110 | 125 | 105 | | | 84 | 50 | 20 | |
| 160M | 1250 | 840 | | 205 | 390 | 350 | 110 | 125 | 105 | | | 150 | 53 | 20 | |
| 160L | 1250 | 840 | | 205 | 390 | 350 | 110 | 125 | 105 | | | 170 | 55 | 20 | |
| 180M | 1400 | 940 | | 230 | 390 | 350 | 110 | 140 | 105 | | | 225 | 57 | 20 | |
| 200L | 1400 | 940 | | 230 | 440 | 400 | 115 | 140 | 105 | | | 300 | 64 | 20 | |
| 225M | 1600 | 1060 | 530 | 270 | 530 | 490 | 125 | 170 | 105 | | | 440 | 76 | 20 | |
| 250M | 1600 | 1060 | 530 | 270 | 600 | 550 | 120 | 230 | 105 | | | 510 | 105 | 20 | |

| 法兰尺寸 Flange dimension | | | | | | | | | | | | |
|---|---|---|---|---|---|---|---|---|---|---|---|---|
| 执行标准 Adopted standard | | | | | | | | | | | | |
| GB9113.1-2000 PN2.5MPa | | | | | | | ANSI B16.5 CLASS 150Lb RF (取整) | | | | | |
| 名称 Name | DN | ϕD | b | ϕK | ϕd | n-ϕd1 | DN | ϕD | b | ϕK | ϕd | n-ϕd1 |
| 泵进口法兰 Pump inlet flange | 100 | 235 | 24 | 190 | 156 | 8-ϕ22 | 100 | 228.5 | 24 | 190.5 | 157.5 | 8-ϕ19 |
| 泵出口法兰 Pump outlet flange | 65 | 185 | 22 | 145 | 118 | 8-ϕ18 | 65 | 178 | 22.5 | 139.5 | 105 | 4-ϕ19 |





## 外形及安装尺寸图 External form and installation dimension drawing

SLCZ65-315型泵 Type pump

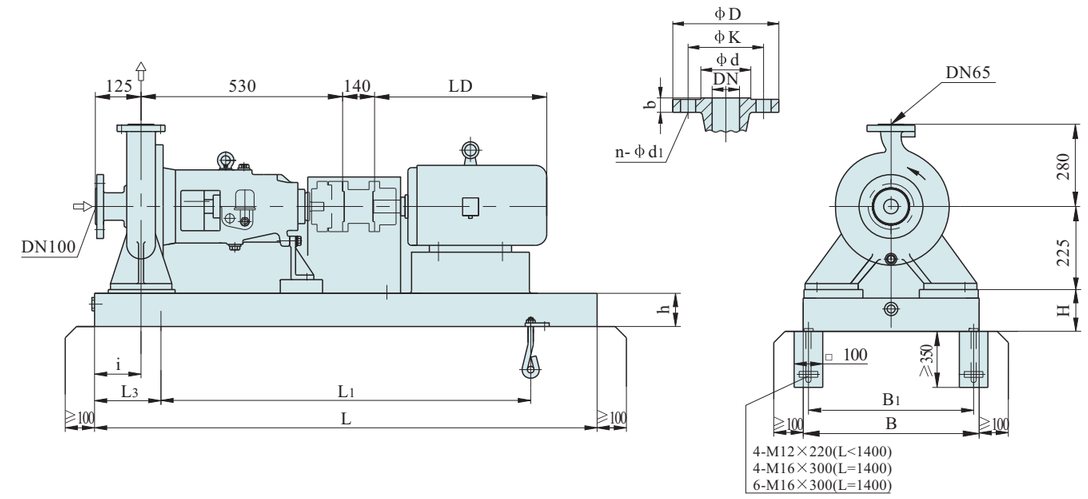


| 机座号 Foundation No. | 尺寸 Dimension (mm) | | | | | | | | | | 近似重量 Approximate weight (kg) | | | | |
|---|---|---|---|---|---|---|---|---|---|---|---|---|---|---|---|
| | L | $L_1$ | $L_2$ | $L_3$ | B | $B_1$ | h | H | i | LD | 泵 Pump | 电机 Motor | 底座 Found-ation | 其它 Other | 总重 Total weight |
| 132S | 1250 | 840 | 530 | 205 | 440 | 400 | 110 | 125 | 105 | | 148 | 84 | 50 | 20 | |
| 160M | 1400 | 940 | 530 | 230 | 440 | 400 | 110 | 140 | 105 | | | 150 | 66 | 20 | |
| 160L | 1400 | 940 | 530 | 230 | 440 | 400 | 110 | 140 | 105 | | | 170 | 66 | 20 | |
| 180M | 1400 | 940 | 530 | 230 | 440 | 400 | 110 | 140 | 105 | | | 225 | 66 | 20 | |
| 200L | 1400 | 940 | 600 | 230 | 440 | 400 | 115 | 170 | 105 | | | 300 | 70 | 20 | |
| 225M | 1600 | 1060 | 600 | 270 | 530 | 490 | 125 | 170 | 105 | | | 440 | 82 | 20 | |
| 250M | 1600 | 1060 | | 270 | 600 | 550 | 120 | 190 | 105 | | | 510 | 104 | 20 | |
| 280S | 1600 | 1060 | | 270 | 650 | 600 | 145 | 230 | 105 | | | 650 | 128 | 20 | |
| 280M | 1600 | 1060 | | 270 | 650 | 600 | 145 | 230 | 105 | | | 800 | 128 | 20 | |
| 315S | 2000 | 1200 | | 400 | 720 | 670 | 145 | 250 | 195 | | | 950 | 154 | 20 | |
| 315M | 2000 | 1200 | | 400 | 720 | 670 | 145 | 250 | 195 | | | 1000 | 184 | 20 | |

| 法兰尺寸 Flange dimension | | | | | | | | | | | | |
|---|---|---|---|---|---|---|---|---|---|---|---|---|
| 执行标准 Adopted standard | | | | | | | | | | | | |
| GB9113.1-2000 PN2.5MPa | | | | | | | ANSI B16.5 CLASS 150Lb RF (取整) | | | | | |
| 名称 Name | DN | ϕD | b | ϕK | ϕd | n-ϕd1 | DN | ϕD | b | ϕK | ϕd | n-ϕd1 |
| 泵进口法兰 Pump inlet flange | 100 | 235 | 24 | 190 | 156 | 8-ϕ22 | 100 | 228.5 | 24 | 190.5 | 157.5 | 8-ϕ19 |
| 泵出口法兰 Pump outlet flange | 65 | 185 | 22 | 145 | 118 | 8-ϕ18 | 65 | 178 | 22.5 | 139.5 | 105 | 4-ϕ19 |

## 外形及安装尺寸图 External form and installation dimension drawing

SLCZ80-160型泵 Type pump

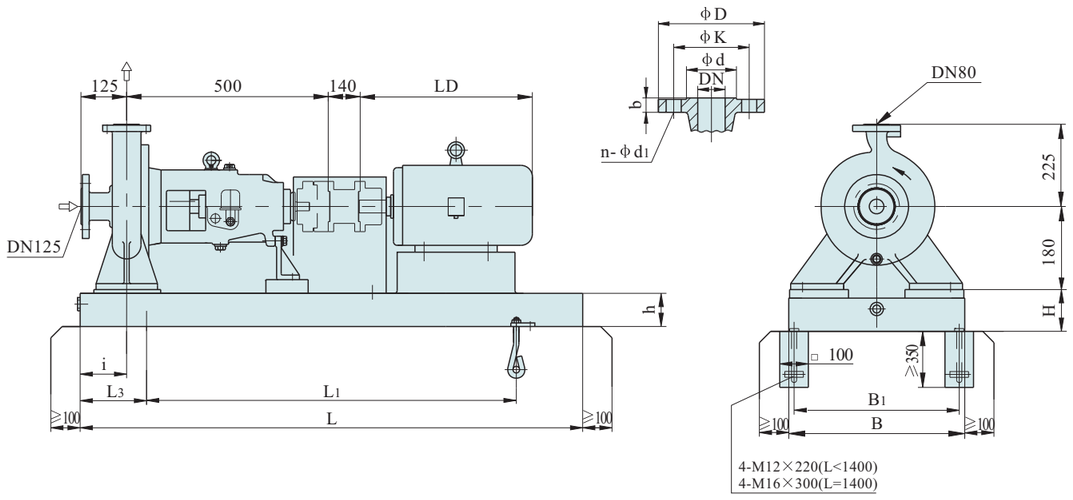


| 机座号 Foundation No. | 尺寸 Dimension (mm) | | | | | | | | | | 近似重量 Approximate weight (kg) | | | | |
|---|---|---|---|---|---|---|---|---|---|---|---|---|---|---|---|
| | L | L1 | L2 | L3 | B | B1 | h | H | i | LD | 泵 Pump | 电机 Motor | 底座 Found-ation | 其它 Other | 总重 Total weight |
| 90S | 1000 | 660 | | 170 | 390 | 350 | 110 | 125 | 90 | | 79 | 31 | 41 | 20 | |
| 90L | 1000 | 660 | | 170 | 390 | 350 | 110 | 125 | 90 | | | 37 | 43 | 20 | |
| 100L | 1120 | 740 | | 190 | 390 | 350 | 110 | 125 | 90 | | | 45 | 47 | 20 | |
| 112M | 1120 | 740 | | 190 | 390 | 350 | 110 | 125 | 90 | | | 53 | 47 | 20 | |
| 132S | 1120 | 740 | | 190 | 390 | 350 | 110 | 125 | 90 | | | 84 | 47 | 20 | |
| 160M | 1250 | 840 | | 205 | 390 | 350 | 110 | 125 | 90 | | | 150 | 49 | 20 | |
| 160L | 1250 | 840 | | 205 | 390 | 350 | 110 | 125 | 90 | | | 170 | 51 | 20 | |
| 180M | 1400 | 940 | | 230 | 390 | 350 | 110 | 140 | 100 | | | 225 | 54 | 20 | |
| 200L | 1400 | 940 | | 230 | 440 | 400 | 115 | 170 | 90 | | | 300 | 54 | 20 | |

| 法兰尺寸 Flange dimension | | | | | | | | | | | | |
|---|---|---|---|---|---|---|---|---|---|---|---|---|
| 执行标准 Adopted standard | | | | | | | | | | | | |
| GB9113.1-2000 PN2.5MPa | | | | | | | ANSI B16.5 CLASS 150Lb RF (取整) | | | | | |
| 名称 Name | DN | ϕD | b | ϕK | ϕd | n-ϕd1 | DN | ϕD | b | ϕK | ϕd | n-ϕd1 |
| 泵进口法兰 Pump inlet flange | 125 | 270 | 26 | 220 | 184 | 8-ϕ26 | 125 | 254 | 24 | 216 | 186 | 8-ϕ22 |
| 泵出口法兰 Pump outlet flange | 80 | 200 | 24 | 160 | 132 | 8-ϕ18 | 80 | 190.5 | 24 | 152.5 | 127 | 4-ϕ19 |





## 外形及安装尺寸图 External form and installation dimension drawing

SLCZ80-200型泵 Type pump

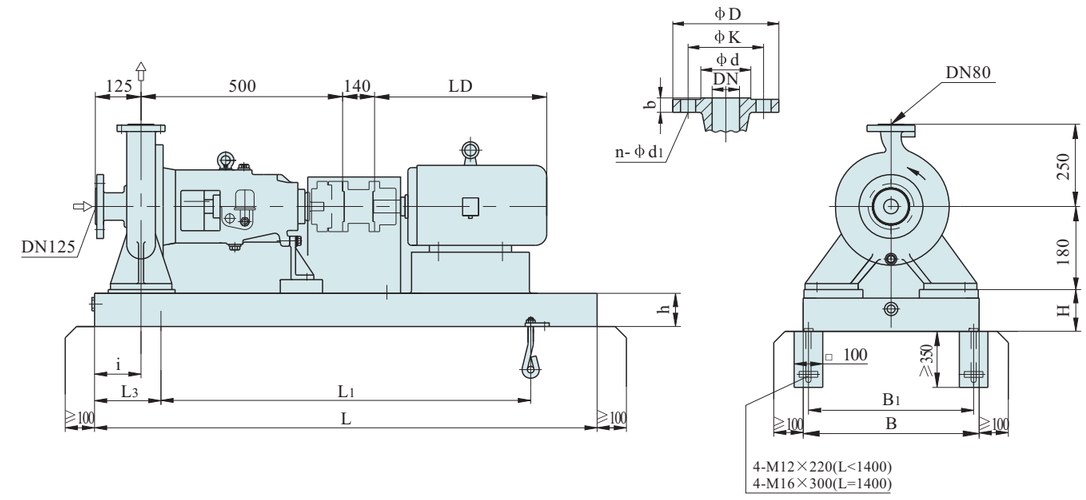


| 机座号 Foundation No. | 尺寸 Dimension (mm) | | | | | | | | | | 近似重量 Approximate weight (kg) | | | | |
|---|---|---|---|---|---|---|---|---|---|---|---|---|---|---|---|
| | L | L1 | L2 | L3 | B | B1 | h | H | i | LD | 泵 Pump | 电机 Motor | 底座 Found-ation | 其它 Other | 总重 Total weight |
| 90S | 1000 | 660 | | 170 | 390 | 350 | 110 | 125 | 90 | | 85 | 31 | 41 | 20 | |
| 90L | 1000 | 660 | | 170 | 390 | 350 | 110 | 125 | 90 | | | 37 | 43 | 20 | |
| 100L | 1120 | 740 | | 190 | 390 | 350 | 110 | 125 | 90 | | | 45 | 45 | 20 | |
| 112M | 1120 | 740 | | 190 | 390 | 350 | 110 | 125 | 90 | | | 53 | 45 | 20 | |
| 132S | 1120 | 740 | | 190 | 390 | 350 | 110 | 125 | 90 | | | 84 | 46 | 20 | |
| 160M | 1250 | 840 | | 205 | 390 | 350 | 110 | 125 | 90 | | | 150 | 48 | 20 | |
| 160L | 1250 | 840 | | 205 | 390 | 350 | 110 | 125 | 90 | | | 170 | 48 | 20 | |
| 180M | 1400 | 940 | | 230 | 390 | 350 | 110 | 140 | 100 | | | 225 | 53 | 20 | |
| 200L | 1400 | 940 | | 230 | 440 | 400 | 115 | 170 | 90 | | | 300 | 66 | 20 | |
| 225M | 1400 | 940 | | 230 | 530 | 490 | 115 | 170 | 90 | | | 440 | 66 | 20 | |

| 法兰尺寸 Flange dimension | | | | | | | | | | | | |
|---|---|---|---|---|---|---|---|---|---|---|---|---|
| 执行标准 Adopted standard | | | | | | | | | | | | |
| GB9113.1-2000 PN2.5MPa | | | | | | | ANSI B16.5 CLASS 150Lb RF (取整) | | | | | |
| 名称 Name | DN | ϕD | b | ϕK | ϕd | n-ϕd1 | DN | ϕD | b | ϕK | ϕd | n-ϕd1 |
| 泵进口法兰 Pump inlet flange | 125 | 270 | 26 | 220 | 184 | 8-ϕ26 | 125 | 254 | 24 | 216 | 186 | 8-ϕ22 |
| 泵出口法兰 Pump outlet flange | 80 | 200 | 24 | 160 | 132 | 8-ϕ18 | 80 | 190.5 | 24 | 152.5 | 127 | 4-ϕ19 |

## 外形及安装尺寸图 External form and installation dimension drawing

SLCZ80-250型泵 Type pump

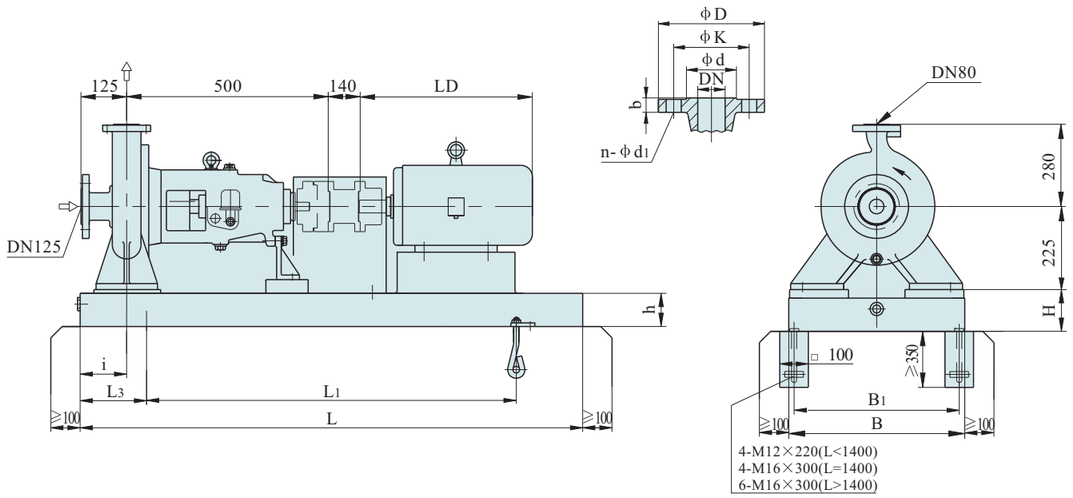


| 机座号 Foundation No. | 尺寸 Dimension (mm) | | | | | | | | | | 近似重量 Approximate weight (kg) | | | | |
|---|---|---|---|---|---|---|---|---|---|---|---|---|---|---|---|
| | L | $L_1$ | $L_2$ | $L_3$ | B | $B_1$ | h | H | i | LD | 泵 Pump | 电机 Motor | 底座 Found-ation | 其它 Other | 总重 Total weight |
| 132S | 1120 | 740 | | 190 | 440 | 400 | 110 | 125 | 105 | | 102 | 84 | 55 | 20 | |
| 132M | 1120 | 740 | | 190 | 440 | 400 | 110 | 125 | 105 | | | 101 | 56 | 20 | |
| 160M | 1250 | 840 | | 205 | 440 | 400 | 110 | 125 | 105 | | | 150 | 59 | 20 | |
| 160L | 1250 | 840 | | 205 | 440 | 400 | 110 | 125 | 105 | | | 170 | 61 | 20 | |
| 180M | 1400 | 940 | | 230 | 440 | 400 | 110 | 140 | 105 | | | 225 | 65 | 20 | |
| 200L | 1400 | 940 | | 230 | 440 | 400 | 110 | 170 | 105 | | | 300 | 72 | 20 | |
| 225M | 1600 | 1060 | 530 | 270 | 530 | 490 | 125 | 170 | 105 | | | 440 | 78 | 20 | |
| 250M | 1600 | 1060 | 530 | 270 | 600 | 550 | 120 | 190 | 105 | | | 510 | 92 | 20 | |
| 280S | 1600 | 1060 | 530 | 270 | 650 | 600 | 145 | 230 | 105 | | | 650 | 110 | 20 | |
| 280M | 1600 | 1060 | 530 | 270 | 650 | 600 | 145 | 230 | 105 | | | 800 | 132 | 20 | |

| 法兰尺寸 Flange dimension | | | | | | | | | | | | |
|---|---|---|---|---|---|---|---|---|---|---|---|---|
| 执行标准 Adopted standard | | | | | | | | | | | | |
| GB9113.1-2000 PN2.5MPa | | | | | | | ANSI B16.5 CLASS 150Lb RF (取整) | | | | | |
| 名称 Name | DN | ϕD | b | ϕK | ϕd | n-ϕd1 | DN | ϕD | b | ϕK | ϕd | n-ϕd1 |
| 泵进口法兰 Pump inlet flange | 125 | 270 | 26 | 220 | 184 | 8-ϕ26 | 125 | 254 | 24 | 216 | 186 | 8-ϕ22 |
| 泵出口法兰 Pump outlet flange | 80 | 200 | 24 | 160 | 132 | 8-ϕ18 | 80 | 190.5 | 24 | 152.5 | 127 | 4-ϕ19 |





## 外形及安装尺寸图 External form and installation dimension drawing

SLCZ80-315型泵 Type pump

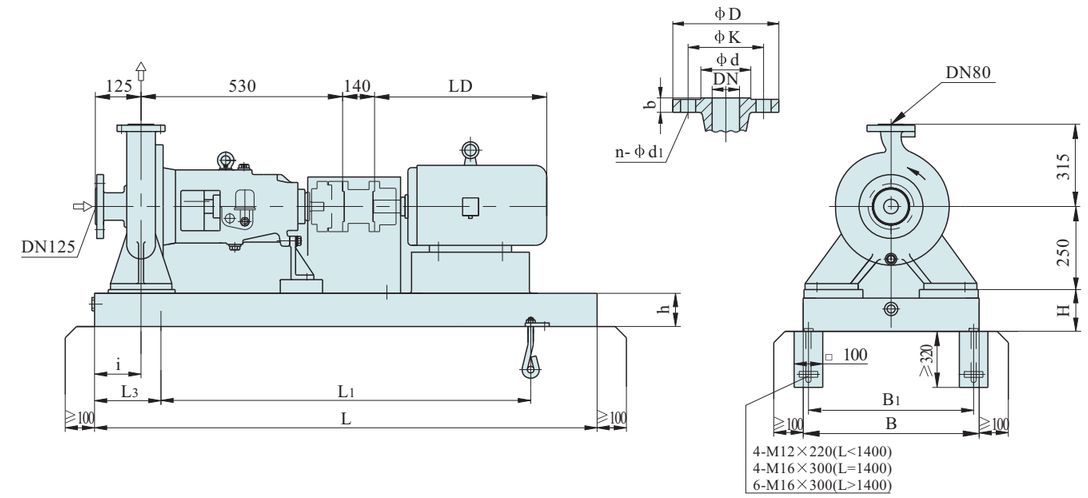


| 机座号 Foundation No. | 尺寸 Dimension (mm) | | | | | | | | | | 近似重量 Approximate weight (kg) | | | | |
|---|---|---|---|---|---|---|---|---|---|---|---|---|---|---|---|
| | L | $L_1$ | $L_2$ | $L_3$ | B | $B_1$ | h | H | i | LD | 泵 Pump | 电机 Motor | 底座 Found-ation | 其它 Other | 总重 Total weight |
| 132S | 1250 | 840 | | 205 | 440 | 400 | 110 | 125 | 105 | | 154 | 84 | 60 | 20 | |
| 160M | 1400 | 940 | | 230 | 440 | 400 | 110 | 140 | 105 | | | 150 | 67 | 20 | |
| 160L | 1400 | 940 | | 230 | 440 | 400 | 110 | 140 | 105 | | | 170 | 67 | 20 | |
| 180M | 1400 | 940 | | 230 | 440 | 400 | 110 | 140 | 105 | | | 225 | 67 | 20 | |
| 200L | 1400 | 940 | | 230 | 440 | 400 | 110 | 170 | 105 | | | 300 | 79 | 20 | |
| 225M | 1600 | 1060 | 530 | 270 | 530 | 490 | 125 | 170 | 105 | | | 440 | 88 | 20 | |
| 250M | 1600 | 1060 | 530 | 270 | 600 | 550 | 120 | 190 | 105 | | | 510 | 96 | 20 | |
| 280S | 1600 | 1060 | 530 | 270 | 650 | 600 | 145 | 230 | 105 | | | 650 | 137 | 20 | |
| 280M | 1600 | 1060 | 530 | 270 | 650 | 600 | 145 | 230 | 105 | | | 800 | 137 | 20 | |
| 315S | 2000 | 1200 | 600 | 400 | 720 | 670 | 145 | 230 | 195 | | | 1000 | 197 | 20 | |
| 315M | 2000 | 1200 | 600 | 400 | 720 | 670 | 145 | 230 | 195 | | | 1300 | 237 | 20 | |

| 法兰尺寸 Flange dimension | | | | | | | | | | | | |
|---|---|---|---|---|---|---|---|---|---|---|---|---|
| 执行标准 Adopted standard | | | | | | | | | | | | |
| GB9113.1-2000 PN2.5MPa | | | | | | | ANSI B16.5 CLASS 150Lb RF (取整) | | | | | |
| 名称 Name | DN | ϕD | b | ϕK | ϕd | n-ϕd1 | DN | ϕD | b | ϕK | ϕd | n-ϕd1 |
| 泵进口法兰 Pump inlet flange | 125 | 270 | 26 | 220 | 184 | 8-ϕ26 | 125 | 254 | 24 | 216 | 186 | 8-ϕ22 |
| 泵出口法兰 Pump outlet flange | 80 | 200 | 24 | 160 | 132 | 8-ϕ18 | 80 | 190.5 | 24 | 152.5 | 127 | 4-ϕ19 |

## 外形及安装尺寸图 External form and installation dimension drawing

SLCZ80-400型泵 Type pump

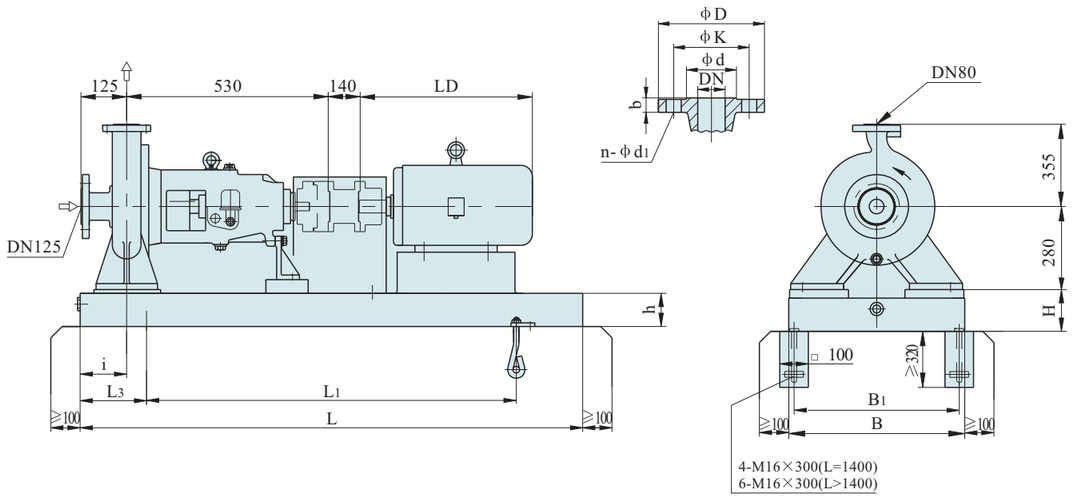


| 机座号 Foundation No. | 尺寸 Dimension (mm) | | | | | | | | | | 近似重量 Approximate weight (kg) | | | | |
|---|---|---|---|---|---|---|---|---|---|---|---|---|---|---|---|
| | L | L1 | L2 | L3 | B | B1 | h | H | i | LD | 泵 Pump | 电机 Motor | 底座 Found-ation | 其它 Other | 总重 Total weight |
| 132S | 1400 | 940 | | 230 | 530 | 490 | 110 | 140 | 105 | | 205 | 84 | 77 | 20 | |
| 160M | 1400 | 940 | | 230 | 530 | 490 | 110 | 140 | 105 | | | 150 | 77 | 20 | |
| 160L | 1400 | 940 | | 230 | 530 | 490 | 110 | 140 | 105 | | | 170 | 79 | 20 | |
| 180M | 1400 | 940 | | 230 | 530 | 490 | 110 | 140 | 105 | | | 225 | 77 | 20 | |
| 200L | 1400 | 940 | | 230 | 530 | 490 | 110 | 140 | 105 | | | 300 | 79 | 20 | |
| 225S | 1600 | 1060 | 530 | 270 | 530 | 490 | 110 | 170 | 105 | | | 390 | 97 | 20 | |
| 225M | 1600 | 1060 | 530 | 270 | 530 | 490 | 110 | 170 | 105 | | | 440 | 97 | 20 | |

| 法兰尺寸 Flange dimension | | | | | | | | | | | | |
|---|---|---|---|---|---|---|---|---|---|---|---|---|
| 执行标准 Adopted standard | | | | | | | | | | | | |
| GB9113.1-2000 PN2.5MPa | | | | | | | ANSI B16.5 CLASS 150Lb RF (取整) | | | | | |
| 名称 Name | DN | ϕD | b | ϕK | ϕd | n-ϕd1 | DN | ϕD | b | ϕK | ϕd | n-ϕd1 |
| 泵进口法兰 Pump inlet flange | 125 | 270 | 26 | 220 | 184 | 8-ϕ26 | 125 | 254 | 24 | 216 | 186 | 8-ϕ22 |
| 泵出口法兰 Pump outlet flange | 80 | 200 | 24 | 160 | 132 | 8-ϕ18 | 80 | 190.5 | 24 | 152.5 | 127 | 4-ϕ19 |





## 外形及安装尺寸图 External form and installation dimension drawing

SLCZ100-200型泵 Type pump

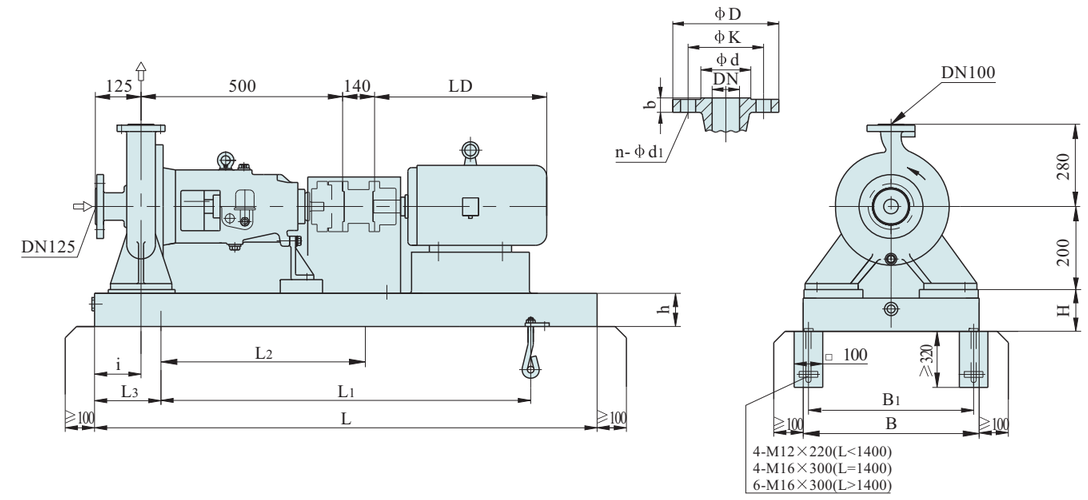


| 机座号 Foundation No. | 尺寸 Dimension (mm) | | | | | | | | | | 近似重量 Approximate weight (kg) | | | | |
|---|---|---|---|---|---|---|---|---|---|---|---|---|---|---|---|
| | L | L1 | L2 | L3 | B | B1 | h | H | i | LD | 泵 Pump | 电机 Motor | 底座 Found-ation | 其它 Other | 总重 Total weight |
| 132S | 1120 | 740 | | 190 | 390 | 350 | 110 | 125 | 105 | | 99 | 84 | 50 | 20 | |
| 160M | 1250 | 840 | | 205 | 390 | 350 | 110 | 125 | 105 | | | 150 | 53 | 20 | |
| 160L | 1250 | 840 | | 205 | 390 | 350 | 110 | 125 | 105 | | | 170 | 55 | 20 | |
| 180M | 1400 | 940 | | 230 | 390 | 350 | 110 | 140 | 105 | | | 225 | 57 | 20 | |
| 200L | 1400 | 940 | | 230 | 440 | 400 | 110 | 140 | 105 | | | 300 | 64 | 20 | |
| 225M | 1600 | 1060 | 530 | 270 | 530 | 490 | 125 | 170 | 105 | | | 440 | 76 | 20 | |
| 250M | 1600 | 1060 | 530 | 270 | 600 | 550 | 110 | 230 | 105 | | | 510 | 105 | 20 | |
| 280S | 1600 | 1060 | 530 | 270 | 650 | 600 | 110 | 250 | 105 | | | 650 | 137 | 20 | |
| 280M | 1600 | 1060 | 530 | 270 | 650 | 600 | 125 | 250 | 105 | | | 800 | 137 | 20 | |

| 法兰尺寸 Flange dimension | | | | | | | | | | | | |
|---|---|---|---|---|---|---|---|---|---|---|---|---|
| 执行标准 Adopted standard | | | | | | | | | | | | |
| GB9113.1-2000 PN2.5MPa | | | | | | | ANSI B16.5 CLASS 150Lb RF (取整) | | | | | |
| 名称 Name | DN | ϕD | b | ϕK | ϕd | n-ϕd1 | DN | ϕD | b | ϕK | ϕd | n-ϕd1 |
| 泵进口法兰 Pump inlet flange | 125 | 270 | 26 | 220 | 184 | 8-ϕ26 | 125 | 254 | 24 | 216 | 186 | 8-ϕ22 |
| 泵出口法兰 Pump outlet flange | 100 | 235 | 24 | 190 | 156 | 8-ϕ22 | 100 | 228.5 | 24 | 190.5 | 157.5 | 8-ϕ19 |

## 外形及安装尺寸图 External form and installation dimension drawing

SLCZ100-250型泵 Type pump

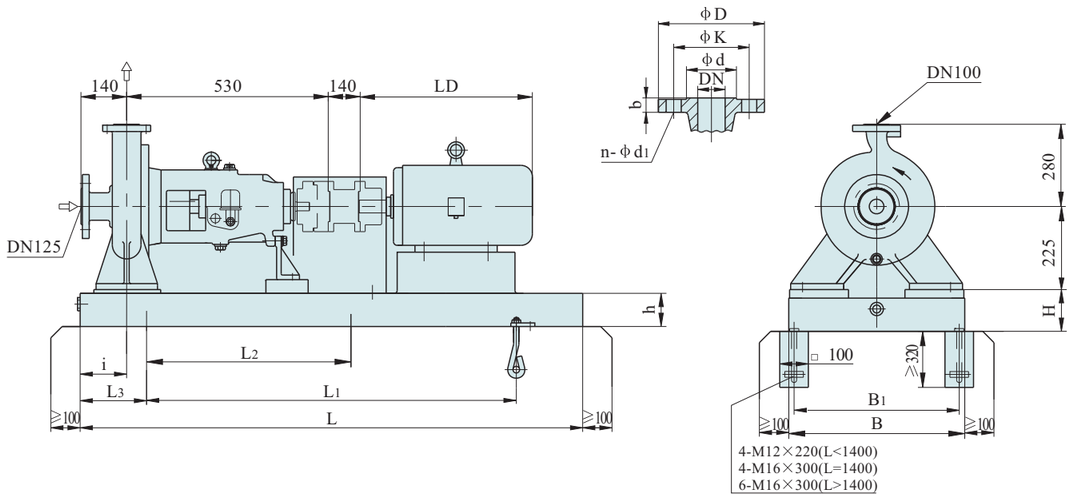


| 机座号 Foundation No. | 尺寸 Dimension (mm) | | | | | | | | | | 近似重量 Approximate weight (kg) | | | | |
|---|---|---|---|---|---|---|---|---|---|---|---|---|---|---|---|
| | L | $L_1$ | $L_2$ | $L_3$ | B | $B_1$ | h | H | i | LD | 泵 Pump | 电机 Motor | 底座 Found-ation | 其它 Other | 总重 Total weight |
| 132S | 1250 | 840 | | 205 | 440 | 400 | 110 | 125 | 105 | | 130 | 84 | 64 | 20 | |
| 160M | 1400 | 940 | | 230 | 440 | 400 | 115 | 140 | 105 | | | 150 | 66 | 20 | |
| 160L | 1400 | 940 | | 230 | 440 | 400 | 115 | 140 | 105 | | | 170 | 67 | 20 | |
| 180M | 1400 | 940 | | 230 | 440 | 400 | 115 | 140 | 105 | | | 225 | 67 | 20 | |
| 200L | 1400 | 940 | | 230 | 440 | 400 | 115 | 170 | 105 | | | 300 | 72 | 20 | |
| 225M | 1600 | 1060 | 530 | 270 | 530 | 490 | 125 | 170 | 105 | | | 440 | 84 | 20 | |
| 250M | 1600 | 1060 | 530 | 270 | 600 | 550 | 120 | 190 | 105 | | | 510 | 92 | 20 | |
| 280S | 1600 | 1060 | 530 | 270 | 650 | 600 | 145 | 230 | 105 | | | 650 | 137 | 20 | |
| 280M | 1600 | 1060 | 530 | 270 | 650 | 600 | 145 | 230 | 105 | | | 800 | 137 | 20 | |
| 315S | 2000 | 1200 | 600 | 400 | 720 | 670 | 145 | 250 | 195 | | | 950 | 164 | 20 | |
| 315M | 2000 | 1200 | 600 | 400 | 720 | 670 | 145 | 250 | 195 | | | 1000 | 197 | 20 | |

| 法兰尺寸 Flange dimension | | | | | | | | | | | | |
|---|---|---|---|---|---|---|---|---|---|---|---|---|
| 执行标准 Adopted standard | | | | | | | | | | | | |
| GB9113.1-2000 PN2.5MPa | | | | | | | ANSI B16.5 CLASS 150Lb RF (取整) | | | | | |
| 名称 Name | DN | ϕD | b | ϕK | ϕd | n-ϕd1 | DN | ϕD | b | ϕK | ϕd | n-ϕd1 |
| 泵进口法兰 Pump inlet flange | 125 | 270 | 26 | 220 | 184 | 8-ϕ26 | 125 | 254 | 24 | 216 | 186 | 8-ϕ22 |
| 泵出口法兰 Pump outlet flange | 100 | 235 | 24 | 190 | 156 | 8-ϕ22 | 100 | 228.5 | 24 | 190.5 | 157.5 | 8-ϕ19 |





## 外形及安装尺寸图 External form and installation dimension drawing

SLCZ100-315型泵 Type pump

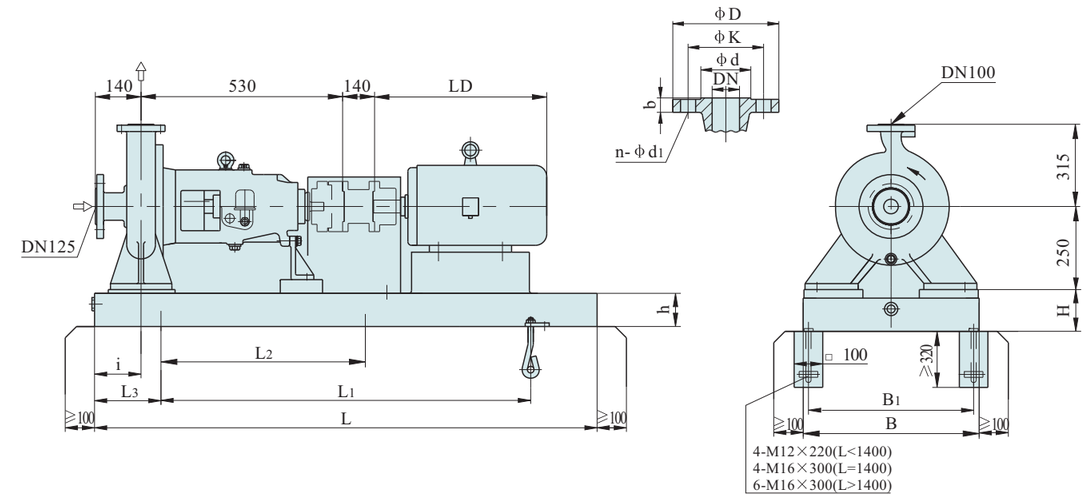


| 机座号 Foundation No. | 尺寸 Dimension (mm) | | | | | | | | | | 近似重量 Approximate weight (kg) | | | | |
|---|---|---|---|---|---|---|---|---|---|---|---|---|---|---|---|
| | L | $L_1$ | $L_2$ | $L_3$ | B | $B_1$ | h | H | i | LD | 泵 Pump | 电机 Motor | 底座 Found-ation | 其它 Other | 总重 Total weight |
| 132S | 1250 | 840 | | 205 | 440 | 400 | 110 | 125 | 105 | | 161 | 84 | 60 | 20 | |
| 160M | 1400 | 940 | | 230 | 440 | 400 | 115 | 140 | 105 | | | 150 | 67 | 20 | |
| 160L | 1400 | 940 | | 230 | 440 | 400 | 115 | 140 | 105 | | | 170 | 67 | 20 | |
| 180M | 1400 | 940 | | 230 | 440 | 400 | 115 | 140 | 105 | | | 225 | 67 | 20 | |
| 200L | 1400 | 940 | | 230 | 440 | 400 | 115 | 170 | 105 | | | 300 | 79 | 20 | |
| 225M | 1600 | 1060 | 530 | 270 | 530 | 490 | 125 | 170 | 105 | | | 440 | 88 | 20 | |
| 250M | 1600 | 1060 | 530 | 270 | 600 | 550 | 120 | 190 | 105 | | | 510 | 96 | 20 | |
| 280S | 1600 | 1060 | 530 | 270 | 650 | 600 | 145 | 230 | 105 | | | 650 | 137 | 20 | |
| 280M | 1600 | 1060 | 530 | 270 | 650 | 600 | 145 | 230 | 105 | | | 800 | 137 | 20 | |
| 315S | 2000 | 1200 | 600 | 300 | 720 | 670 | 145 | 230 | 195 | | | 950 | 164 | 20 | |
| 315M | 2000 | 1200 | 600 | 300 | 720 | 670 | 145 | 230 | 195 | | | 1000 | 197 | 20 | |
| 315L | 2000 | 1200 | 600 | 300 | 720 | 670 | 100 | 230 | 195 | | | 1300 | 237 | 20 | |

| 法兰尺寸 Flange dimension | | | | | | | | | | | | |
|---|---|---|---|---|---|---|---|---|---|---|---|---|
| 执行标准 Adopted standard | | | | | | | | | | | | |
| GB9113.1-2000 PN2.5MPa | | | | | | | ANSI B16.5 CLASS 150Lb RF (取整) | | | | | |
| 名称 Name | DN | ϕD | b | ϕK | ϕd | n-ϕd1 | DN | ϕD | b | ϕK | ϕd | n-ϕd1 |
| 泵进口法兰 Pump inlet flange | 125 | 270 | 26 | 220 | 184 | 8-ϕ26 | 125 | 254 | 24 | 216 | 186 | 8-ϕ22 |
| 泵出口法兰 Pump outlet flange | 100 | 235 | 24 | 190 | 156 | 8-ϕ22 | 100 | 228.5 | 24 | 190.5 | 157.5 | 8-ϕ19 |

## 外形及安装尺寸图 External form and installation dimension drawing

SLCZ100-400型泵 Type pump

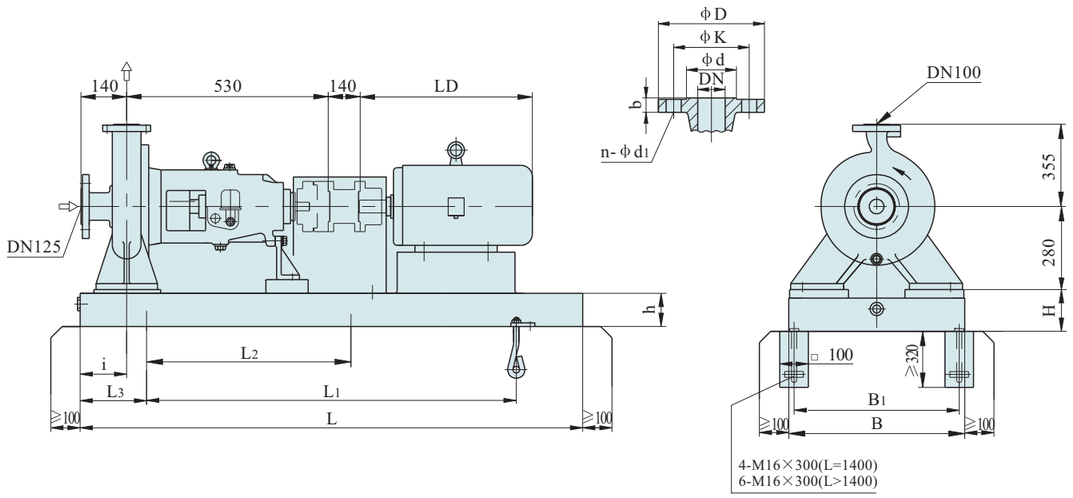


| 机座号 Foundation No. | 尺寸 Dimension (mm) | | | | | | | | | | 近似重量 Approximate weight (kg) | | | | |
|---|---|---|---|---|---|---|---|---|---|---|---|---|---|---|---|
| | L | L1 | L2 | L3 | B | B1 | h | H | i | LD | 泵 Pump | 电机 Motor | 底座 Found-ation | 其它 Other | 总重 Total weight |
| 160M | 1400 | 940 | | 230 | 530 | 490 | 125 | 140 | 125 | | 211 | 150 | 103 | 20 | |
| 160L | 1400 | 940 | | 230 | 530 | 490 | 125 | 140 | 125 | | | 170 | 105 | 20 | |
| 180M | 1400 | 940 | | 230 | 530 | 490 | 125 | 140 | 125 | | | 225 | 102 | 20 | |
| 200L | 1600 | 1060 | 530 | 270 | 530 | 490 | 125 | 140 | 125 | | | 300 | 107 | 20 | |
| 225S | 1600 | 1060 | 530 | 270 | 530 | 490 | 125 | 170 | 125 | | | 440 | 121 | 20 | |
| 225M | 1600 | 1060 | 530 | 270 | 530 | 490 | 125 | 170 | 125 | | | 440 | 121 | 20 | |

| 法兰尺寸 Flange dimension | | | | | | | | | | | | |
|---|---|---|---|---|---|---|---|---|---|---|---|---|
| 执行标准 Adopted standard | | | | | | | | | | | | |
| GB9113.1-2000 PN2.5MPa | | | | | | | ANSI B16.5 CLASS 150Lb RF (取整) | | | | | |
| 名称 Name | DN | ϕD | b | ϕK | ϕd | n-ϕd1 | DN | ϕD | b | ϕK | ϕd | n-ϕd1 |
| 泵进口法兰 Pump inlet flange | 125 | 270 | 26 | 220 | 184 | 8-ϕ26 | 125 | 254 | 24 | 216 | 186 | 8-ϕ22 |
| 泵出口法兰 Pump outlet flange | 100 | 235 | 24 | 190 | 156 | 8-ϕ22 | 100 | 228.5 | 24 | 190.5 | 157.5 | 8-ϕ19 |





## 外形及安装尺寸图 External form and installation dimension drawing

SLCZ125-250型泵 Type pump

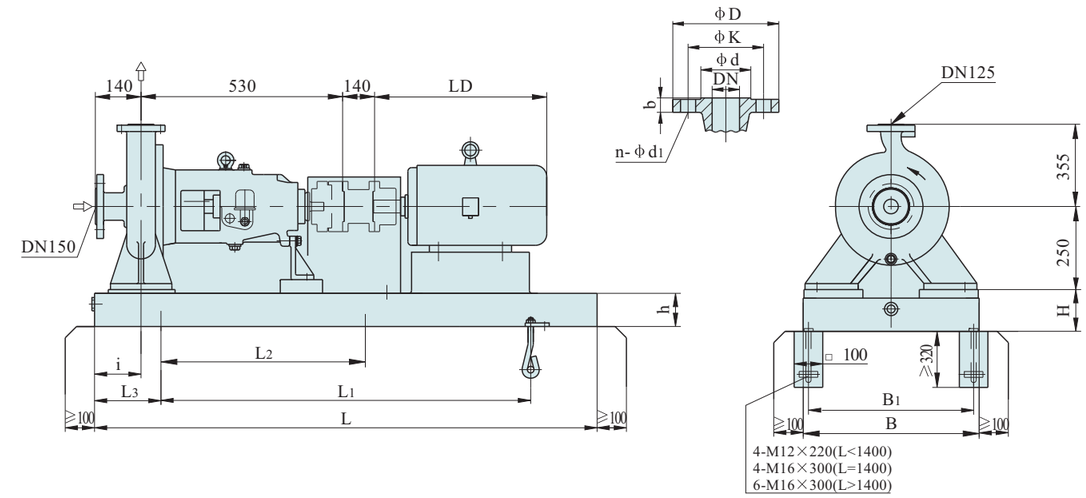


| 机座号 Foundation No. | 尺寸 Dimension (mm) | | | | | | | | | | 近似重量 Approximate weight (kg) | | | | |
|---|---|---|---|---|---|---|---|---|---|---|---|---|---|---|---|
| | L | L1 | L2 | L3 | B | B1 | h | H | i | LD | 泵 Pump | 电机 Motor | 底座 Found-ation | 其它 Other | 总重 Total weight |
| 132S | 1250 | 840 | | 205 | 440 | 400 | 110 | 125 | 105 | | 150 | 84 | 60 | 20 | |
| 160M | 1400 | 940 | | 230 | 440 | 400 | 115 | 140 | 105 | | | 150 | 67 | 20 | |
| 160L | 1400 | 940 | | 230 | 440 | 400 | 115 | 140 | 105 | | | 170 | 67 | 20 | |
| 180M | 1400 | 940 | | 230 | 440 | 400 | 115 | 140 | 105 | | | 225 | 67 | 20 | |
| 200L | 1400 | 940 | | 230 | 440 | 400 | 115 | 170 | 105 | | | 300 | 79 | 20 | |
| 225S | 1600 | 1060 | 530 | 270 | 530 | 490 | 125 | 170 | 105 | | | 390 | 88 | 20 | |
| 225M | 1600 | 1060 | 530 | 270 | 530 | 490 | 125 | 170 | 105 | | | 440 | 88 | 20 | |
| 250M | 1600 | 1060 | 530 | 270 | 600 | 550 | 120 | 190 | 105 | | | 510 | 96 | 20 | |
| 280S | 1600 | 1060 | 530 | 270 | 650 | 600 | 145 | 230 | 105 | | | 650 | 137 | 20 | |
| 280M | 1600 | 1060 | 530 | 270 | 650 | 600 | 145 | 230 | 105 | | | 800 | 137 | 20 | |

| 法兰尺寸 Flange dimension | | | | | | | | | | | | |
|---|---|---|---|---|---|---|---|---|---|---|---|---|
| 执行标准 Adopted standard | | | | | | | | | | | | |
| GB9113.1-2000 PN2.5MPa | | | | | | | ANSI B16.5 CLASS 150Lb RF (取整) | | | | | |
| 名称 Name | DN | ϕD | b | ϕK | ϕd | n-ϕd1 | DN | ϕD | b | ϕK | ϕd | n-ϕd1 |
| 泵进口法兰 Pump inlet flange | 150 | 300 | 28 | 250 | 211 | 8-ϕ26 | 150 | 279.5 | 25.5 | 241.5 | 216 | 8-ϕ22 |
| 泵出口法兰 Pump outlet flange | 125 | 270 | 26 | 220 | 184 | 8-ϕ26 | 125 | 254 | 24 | 216 | 186 | 8-ϕ22 |

## 外形及安装尺寸图 External form and installation dimension drawing

SLCZ125-315型泵 Type pump

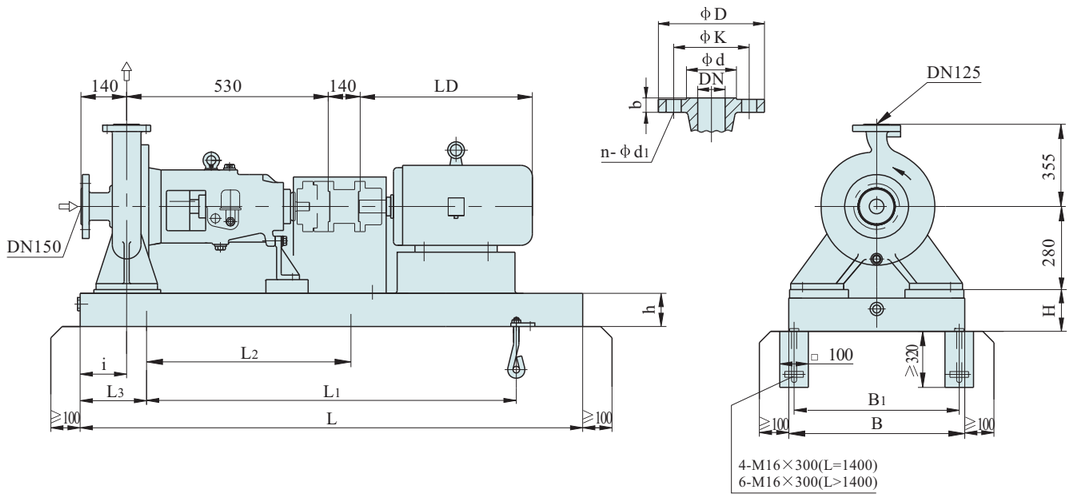


| 机座号 Foundation No. | 尺寸 Dimension (mm) | | | | | | | | | | 近似重量 Approximate weight (kg) | | | | |
|---|---|---|---|---|---|---|---|---|---|---|---|---|---|---|---|
| | L | L1 | L2 | L3 | B | B1 | h | H | i | LD | 泵 Pump | 电机 Motor | 底座 Found-ation | 其它 Other | 总重 Total weight |
| 160M | 1400 | 940 | | 230 | 530 | 490 | 125 | 140 | 125 | | 185 | 150 | 103 | 20 | |
| 160L | 1400 | 940 | | 230 | 530 | 490 | 125 | 140 | 125 | | | 170 | 105 | 20 | |
| 180M | 1400 | 940 | | 230 | 530 | 490 | 125 | 140 | 125 | | | 225 | 102 | 20 | |
| 200L | 1600 | 1060 | 530 | 270 | 530 | 490 | 125 | 140 | 125 | | | 300 | 107 | 20 | |
| 225S | 1600 | 1060 | 530 | 270 | 530 | 490 | 125 | 170 | 125 | | | 440 | 121 | 20 | |
| 225M | 1600 | 1060 | 530 | 270 | 530 | 490 | 125 | 170 | 125 | | | 440 | 121 | 20 | |

| 法兰尺寸 Flange dimension | | | | | | | | | | | | |
|---|---|---|---|---|---|---|---|---|---|---|---|---|
| 执行标准 Adopted standard | | | | | | | | | | | | |
| GB9113.1-2000 PN2.5MPa | | | | | | | ANSI B16.5 CLASS 150Lb RF (取整) | | | | | |
| 名称 Name | DN | ϕD | b | ϕK | ϕd | n-ϕd1 | DN | ϕD | b | ϕK | ϕd | n-ϕd1 |
| 泵进口法兰 Pump inlet flange | 150 | 300 | 28 | 250 | 211 | 8-ϕ26 | 150 | 279.5 | 25.5 | 241.5 | 216 | 8-ϕ22 |
| 泵出口法兰 Pump outlet flange | 125 | 270 | 26 | 220 | 184 | 8-ϕ26 | 125 | 254 | 24 | 216 | 186 | 8-ϕ22 |





## 外形及安装尺寸图 External form and installation dimension drawing

SLCZ125-400型泵 Type pump

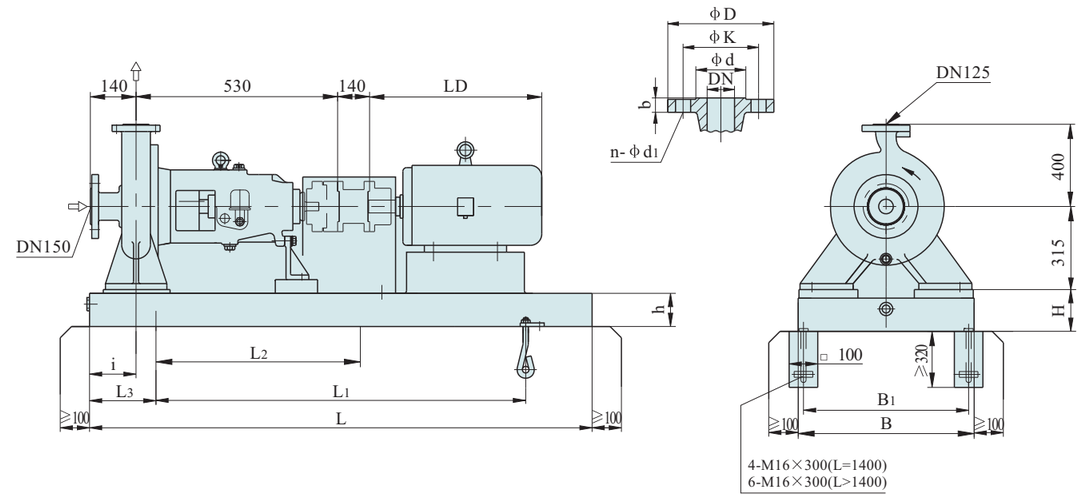


| 机座号 Foundation No. | 尺寸 Dimension (mm) | | | | | | | | | | 近似重量 Approximate weight (kg) | | | | |
|---|---|---|---|---|---|---|---|---|---|---|---|---|---|---|---|
| | L | L1 | L2 | L3 | B | B1 | h | H | i | LD | 泵 Pump | 电机 Motor | 底座 Found-ation | 其它 Other | 总重 Total weight |
| 160M | 1400 | 940 | | 230 | 530 | 490 | 125 | 140 | 125 | | 224 | 150 | 107 | 20 | |
| 160L | 1400 | 940 | | 230 | 530 | 490 | 125 | 140 | 125 | | | 170 | 109 | 20 | |
| 180M | 1400 | 940 | | 230 | 530 | 490 | 125 | 140 | 125 | | | 225 | 106 | 20 | |
| 200L | 1600 | 1060 | 530 | 270 | 530 | 490 | 125 | 140 | 125 | | | 300 | 128 | 20 | |
| 225S | 1600 | 1060 | 530 | 270 | 530 | 490 | 125 | 170 | 125 | | | 440 | 128 | 20 | |
| 225M | 1600 | 1060 | 530 | 270 | 530 | 490 | 125 | 170 | 125 | | | 440 | 128 | 20 | |
| 250M | 1600 | 1060 | 530 | 270 | 600 | 550 | 125 | 190 | 125 | | | 510 | 154 | 20 | |
| 280S | 1600 | 1060 | 530 | 270 | 650 | 600 | 145 | 230 | 125 | | | 650 | 184 | 20 | |

| 法兰尺寸 Flange dimension | | | | | | | | | | | | |
|---|---|---|---|---|---|---|---|---|---|---|---|---|
| 执行标准 Adopted standard | | | | | | | | | | | | |
| GB9113.1-2000 PN2.5MPa | | | | | | | ANSI B16.5 CLASS 150Lb RF (取整) | | | | | |
| 名称 Name | DN | ϕD | b | ϕK | ϕd | n-ϕd1 | DN | ϕD | b | ϕK | ϕd | n-ϕd1 |
| 泵进口法兰 Pump inlet flange | 150 | 300 | 28 | 250 | 211 | 8-ϕ26 | 150 | 279.5 | 25.5 | 241.5 | 216 | 8-ϕ22 |
| 泵出口法兰 Pump outlet flange | 125 | 270 | 26 | 220 | 184 | 8-ϕ26 | 125 | 254 | 24 | 216 | 186 | 8-ϕ22 |

## 外形及安装尺寸图 External form and installation dimension drawing

SLCZ150-250型泵 Type pump

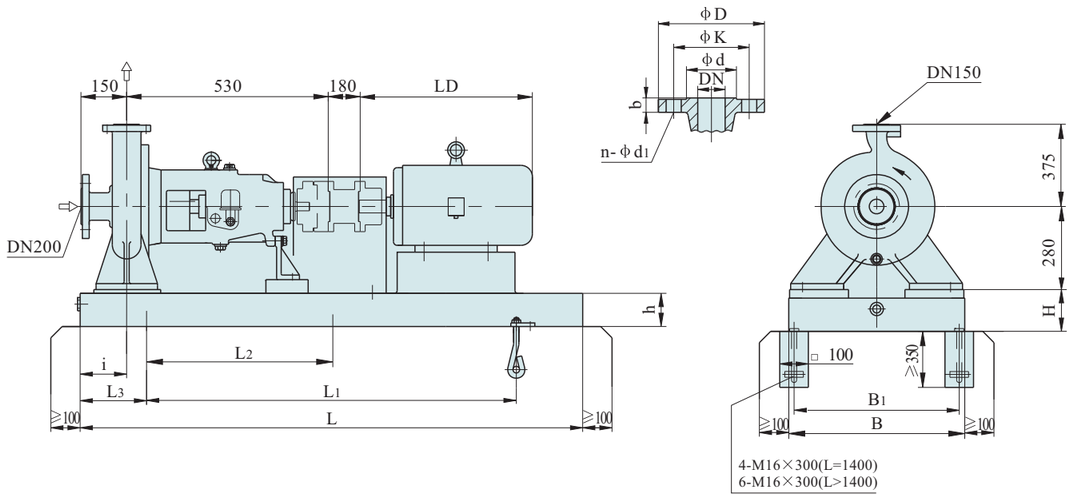


| 机座号 Foundation No. | 尺寸 Dimension (mm) | | | | | | | | | | 近似重量 Approximate weight (kg) | | | | |
|---|---|---|---|---|---|---|---|---|---|---|---|---|---|---|---|
| | L | $L_1$ | $L_2$ | $L_3$ | B | $B_1$ | h | H | i | LD | 泵 Pump | 电机 Motor | 底座 Found-ation | 其它 Other | 总重 Total weight |
| 132S | 1400 | 940 | | 230 | 650 | 600 | 150 | 160 | 125 | | 180 | 84 | 125 | 20 | |
| 132M | 1400 | 940 | | 230 | 650 | 600 | 150 | 160 | 125 | | | 101 | 127 | 20 | |
| 160M | 1600 | 1060 | 530 | 270 | 650 | 600 | 145 | 160 | 125 | | | 150 | 136 | 20 | |
| 160L | 1600 | 1060 | 530 | 270 | 650 | 600 | 145 | 160 | 125 | | | 170 | 137 | 20 | |
| 180M | 1600 | 1060 | 530 | 270 | 650 | 600 | 145 | 160 | 125 | | | 225 | 134 | 20 | |
| 180L | 1600 | 1060 | 530 | 270 | 650 | 600 | 145 | 160 | 125 | | | 270 | 136 | 20 | |
| 200L | 1600 | 1060 | 530 | 270 | 650 | 600 | 145 | 160 | 125 | | | 300 | 131 | 20 | |
| 225S | 1600 | 1060 | 530 | 270 | 650 | 600 | 145 | 160 | 125 | | | 390 | 128 | 20 | |
| 225M | 1600 | 1060 | 530 | 270 | 650 | 600 | 145 | 160 | 125 | | | 440 | 191 | 30 | |

| 法兰尺寸 Flange dimension | | | | | | | | | | | | |
|---|---|---|---|---|---|---|---|---|---|---|---|---|
| 执行标准 Adopted standard | | | | | | | | | | | | |
| GB9113.1-2000 PN2.5MPa | | | | | | | ANSI B16.5 CLASS 150Lb RF (取整) | | | | | |
| 名称 Name | DN | ϕD | b | ϕK | ϕd | n-ϕd1 | DN | ϕD | b | ϕK | ϕd | n-ϕd1 |
| 泵进口法兰 Pump inlet flange | 200 | 360 | 30 | 310 | 274 | 12-ϕ26 | 200 | 343 | 28.5 | 298.5 | 270 | 8-ϕ22 |
| 泵出口法兰 Pump outlet flange | 150 | 300 | 28 | 250 | 211 | 8-ϕ26 | 150 | 279.5 | 25.5 | 241.5 | 216 | 8-ϕ22 |





## 外形及安装尺寸图 External form and installation dimension drawing

SLCZ150-315型泵 Type pump

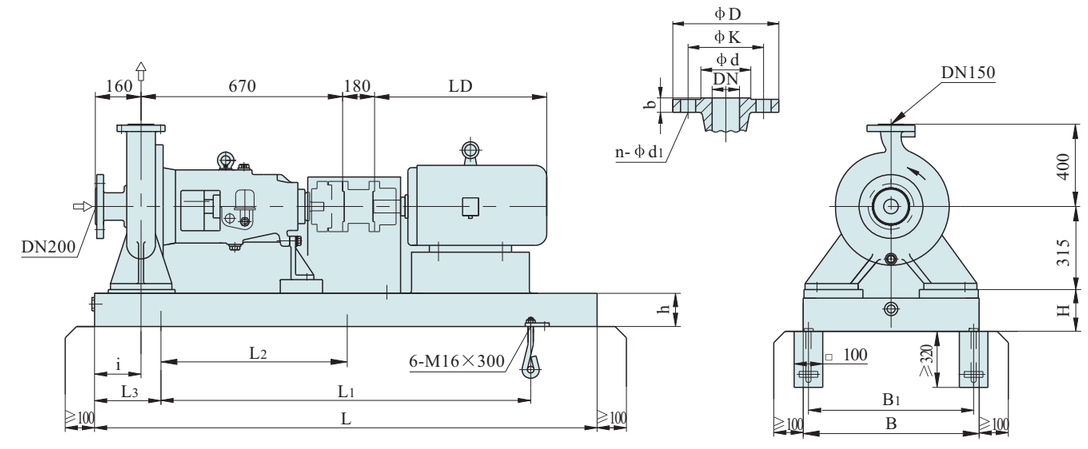


| 机座号 Foundation No. | 尺寸 Dimension (mm) | | | | | | | | | | 近似重量 Approximate weight (kg) | | | | |
|---|---|---|---|---|---|---|---|---|---|---|---|---|---|---|---|
| | L | $L_1$ | $L_2$ | $L_3$ | B | $B_1$ | h | H | i | LD | 泵 Pump | 电机 Motor | 底座 Found-ation | 其它 Other | 总重 Total weight |
| 160M | 1800 | 1200 | 600 | 300 | 720 | 670 | 145 | 160 | 125 | | 273 | 150 | 170 | 30 | |
| 160L | 1800 | 1200 | 600 | 300 | 720 | 670 | 145 | 160 | 125 | | | 170 | 164 | 30 | |
| 180M | 1800 | 1200 | 600 | 300 | 720 | 670 | 145 | 160 | 125 | | | 225 | 160 | 30 | |
| 180L | 1800 | 1200 | 600 | 300 | 720 | 670 | 145 | 160 | 125 | | | 270 | 162 | 30 | |
| 200L | 1800 | 1200 | 600 | 300 | 720 | 670 | 145 | 160 | 125 | | | 300 | 160 | 30 | |
| 225S | 1800 | 1200 | 600 | 300 | 720 | 670 | 145 | 160 | 125 | | | 390 | 156 | 30 | |
| 225M | 1800 | 1200 | 600 | 300 | 720 | 670 | 145 | 160 | 125 | | | 440 | 156 | 30 | |
| 250M | 1800 | 1200 | 600 | 300 | 720 | 670 | 145 | 160 | 125 | | | 510 | 152 | 30 | |
| 280S | 1800 | 1200 | 600 | 300 | 720 | 670 | 145 | 160 | 120 | | | 650 | 161 | 30 | |

| 法兰尺寸 Flange dimension | | | | | | | | | | | | |
|---|---|---|---|---|---|---|---|---|---|---|---|---|
| 执行标准 Adopted standard | | | | | | | | | | | | |
| GB9113.1-2000 PN2.5MPa | | | | | | | ANSI B16.5 CLASS 150Lb RF (取整) | | | | | |
| 名称 Name | DN | ϕD | b | ϕK | ϕd | n-ϕd1 | DN | ϕD | b | ϕK | ϕd | n-ϕd1 |
| 泵进口法兰 Pump inlet flange | 200 | 360 | 30 | 310 | 274 | 12-ϕ26 | 200 | 343 | 28.5 | 298.5 | 270 | 8-ϕ22 |
| 泵出口法兰 Pump outlet flange | 150 | 300 | 28 | 250 | 211 | 8-ϕ26 | 150 | 279.5 | 25.5 | 241.5 | 216 | 8-ϕ22 |

## 外形及安装尺寸图 External form and installation dimension drawing

SLCZ150-400型泵 Type pump

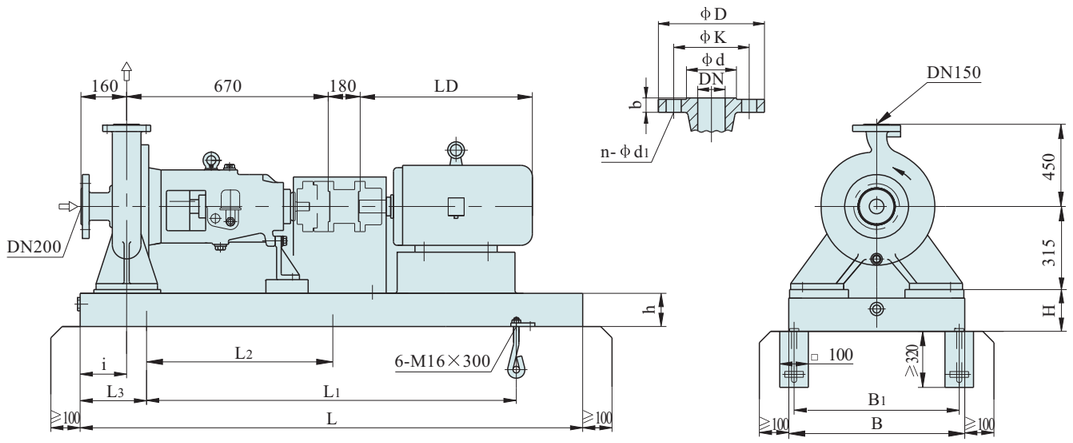


| 机座号 Foundation No. | 尺寸 Dimension (mm) | | | | | | | | | | 近似重量 Approximate weight (kg) | | | | |
|---|---|---|---|---|---|---|---|---|---|---|---|---|---|---|---|
| | L | L1 | L2 | L3 | B | B1 | h | H | i | LD | 泵 Pump | 电机 Motor | 底座 Found-ation | 其它 Other | 总重 Total weight |
| 180M | 1800 | 1200 | 600 | 300 | 720 | 670 | 145 | 160 | 125 | | 314 | 225 | 160 | 30 | |
| 180L | 1800 | 1200 | 600 | 300 | 720 | 670 | 145 | 160 | 125 | | | 270 | 162 | 30 | |
| 200L | 1800 | 1200 | 600 | 300 | 720 | 670 | 145 | 160 | 125 | | | 300 | 160 | 30 | |
| 225S | 1800 | 1200 | 600 | 300 | 720 | 670 | 145 | 160 | 125 | | | 390 | 156 | 30 | |
| 225M | 1800 | 1200 | 600 | 300 | 720 | 670 | 145 | 160 | 125 | | | 440 | 156 | 30 | |
| 250M | 1800 | 1200 | 600 | 300 | 720 | 670 | 145 | 160 | 125 | | | 510 | 152 | 30 | |
| 280S | 1800 | 1200 | 600 | 300 | 720 | 670 | 145 | 160 | 120 | | | 650 | 161 | 30 | |
| 280M | 1800 | 1200 | 600 | 300 | 720 | 670 | 145 | 160 | 120 | | | 800 | 163 | 30 | |
| 315S | 2000 | 1400 | 700 | 300 | 720 | 670 | 145 | 160 | 120 | | | 950 | 196 | 30 | |
| 315M | 2000 | 1400 | 700 | 300 | 720 | 670 | 145 | 160 | 120 | | | 1000 | 235 | 30 | |

| 法兰尺寸 Flange dimension | | | | | | | | | | | | |
|---|---|---|---|---|---|---|---|---|---|---|---|---|
| 执行标准 Adopted standard | | | | | | | | | | | | |
| GB9113.1-2000 PN2.5MPa | | | | | | | ANSI B16.5 CLASS 150Lb RF (取整) | | | | | |
| 名称 Name | DN | ϕD | b | ϕK | ϕd | n-ϕd1 | DN | ϕD | b | ϕK | ϕd | n-ϕd1 |
| 泵进口法兰 Pump inlet flange | 200 | 360 | 30 | 310 | 274 | 12-ϕ26 | 200 | 343 | 28.5 | 298.5 | 270 | 8-ϕ22 |
| 泵出口法兰 Pump outlet flange | 150 | 300 | 28 | 250 | 211 | 8-ϕ26 | 150 | 279.5 | 25.5 | 241.5 | 216 | 8-ϕ22 |





## 外形及安装尺寸图 External form and installation dimension drawing

SLCZ150-500型泵 Type pump

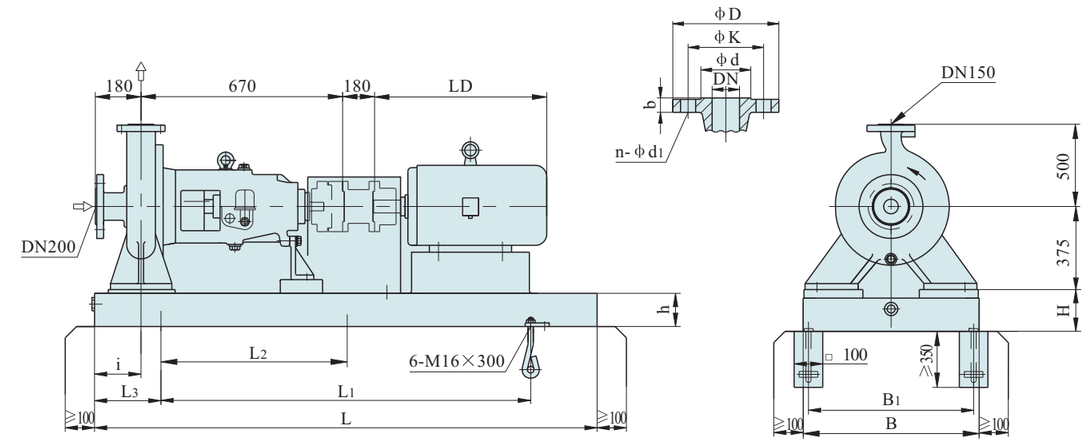


| 机座号 Foundation No. | 尺寸 Dimension (mm) | | | | | | | | | | 近似重量 Approximate weight (kg) | | | | |
|---|---|---|---|---|---|---|---|---|---|---|---|---|---|---|---|
| | L | L1 | L2 | L3 | B | B1 | h | H | i | LD | 泵 Pump | 电机 Motor | 底座 Found-ation | 其它 Other | 总重 Total weight |
| 180M | 1800 | 1200 | 600 | 300 | 720 | 670 | 145 | 160 | 125 | | 397 | 225 | 167 | 30 | |
| 180L | 1800 | 1200 | 600 | 300 | 720 | 670 | 145 | 160 | 125 | | | 270 | 167 | 30 | |
| 200L | 1800 | 1200 | 600 | 300 | 720 | 670 | 145 | 160 | 125 | | | 300 | 165 | 30 | |
| 225S | 1800 | 1200 | 600 | 300 | 720 | 670 | 145 | 160 | 125 | | | 390 | 165 | 30 | |
| 225M | 1800 | 1200 | 600 | 300 | 720 | 670 | 145 | 160 | 125 | | | 440 | 165 | 30 | |
| 250M | 1800 | 1200 | 600 | 300 | 720 | 670 | 145 | 160 | 125 | | | 510 | 161 | 30 | |
| 280S | 1800 | 1200 | 600 | 300 | 720 | 670 | 145 | 160 | 120 | | | 650 | 176 | 30 | |
| 280M | 1800 | 1200 | 600 | 300 | 720 | 670 | 145 | 160 | 120 | | | 800 | 176 | 30 | |
| 315S | 2000 | 1400 | 700 | 300 | 720 | 670 | 145 | 190 | 210 | | | 950 | 211 | 30 | |
| 315M | 2000 | 1400 | 700 | 300 | 720 | 670 | 145 | 190 | 210 | | | 1000 | 253 | 30 | |

| 法兰尺寸 Flange dimension | | | | | | | | | | | | |
|---|---|---|---|---|---|---|---|---|---|---|---|---|
| 执行标准 Adopted standard | | | | | | | | | | | | |
| GB9113.1-2000 PN2.5MPa | | | | | | | ANSI B16.5 CLASS 150Lb RF (取整) | | | | | |
| 名称 Name | DN | ϕD | b | ϕK | ϕd | n-ϕd1 | DN | ϕD | b | ϕK | ϕd | n-ϕd1 |
| 泵进口法兰 Pump inlet flange | 200 | 360 | 30 | 310 | 274 | 12-ϕ26 | 200 | 343 | 28.5 | 298.5 | 270 | 8-ϕ22 |
| 泵出口法兰 Pump outlet flange | 150 | 300 | 28 | 250 | 211 | 8-ϕ26 | 150 | 279.5 | 25.5 | 241.5 | 216 | 8-ϕ22 |

## 外形及安装尺寸图 External form and installation dimension drawing

SLCZ200-250型泵 Type pump

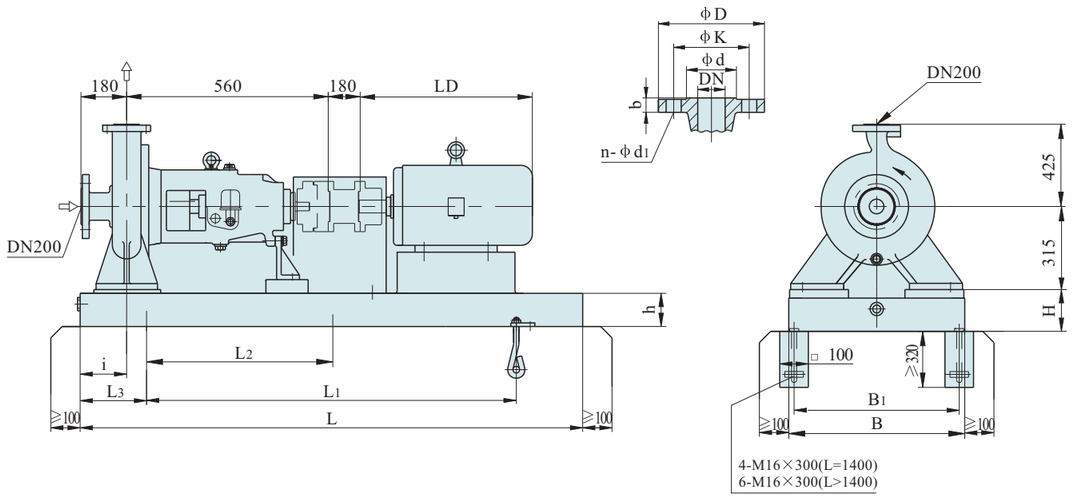


| 机座号 Foundation No. | 尺寸 Dimension (mm) | | | | | | | | | | 近似重量 Approximate weight (kg) | | | | |
|---|---|---|---|---|---|---|---|---|---|---|---|---|---|---|---|
| | L | $L_1$ | $L_2$ | $L_3$ | B | $B_1$ | h | H | i | LD | 泵 Pump | 电机 Motor | 底座 Found-ation | 其它 Other | 总重 Total weight |
| 160M | 1400 | 940 | | 230 | 650 | 600 | 150 | 160 | 125 | | 234 | 150 | 128 | 20 | |
| 160L | 1400 | 940 | | 230 | 650 | 600 | 150 | 160 | 125 | | | 170 | 131 | 20 | |
| 180M | 1600 | 1060 | 530 | 270 | 650 | 600 | 145 | 160 | 125 | | | 225 | 131 | 20 | |
| 180L | 1600 | 1060 | 530 | 270 | 650 | 600 | 145 | 160 | 125 | | | 270 | 131 | 20 | |
| 200L | 1600 | 1060 | 530 | 270 | 650 | 600 | 145 | 160 | 125 | | | 390 | 131 | 20 | |
| 225S | 1600 | 1060 | 530 | 270 | 650 | 600 | 145 | 160 | 125 | | | 300 | 138 | 20 | |

| 法兰尺寸 Flange dimension | | | | | | | | | | | | |
|---|---|---|---|---|---|---|---|---|---|---|---|---|
| 执行标准 Adopted standard | | | | | | | | | | | | |
| GB9113.1-2000 PN2.5MPa | | | | | | | ANSI B16.5 CLASS 150Lb RF (取整) | | | | | |
| 名称 Name | DN | ϕD | b | ϕK | ϕd | n-ϕd1 | DN | ϕD | b | ϕK | ϕd | n-ϕd1 |
| 泵进口法兰 Pump inlet flange | 200 | 360 | 30 | 310 | 274 | 12-ϕ26 | 200 | 343 | 28.5 | 298.5 | 270 | 8-ϕ22 |
| 泵出口法兰 Pump outlet flange | 200 | 360 | 30 | 310 | 274 | 12-ϕ26 | 200 | 343 | 28.5 | 298.5 | 270 | 8-ϕ22 |





## 外形及安装尺寸图 External form and installation dimension drawing

SLCZ200-315型泵 Type pump

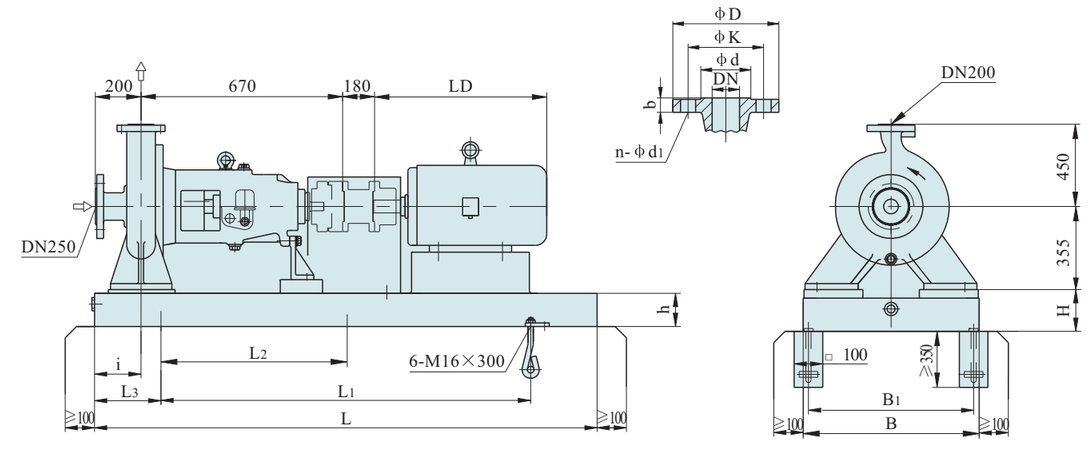


| 机座号 Foundation No. | 尺寸 Dimension (mm) | | | | | | | | | | 近似重量 Approximate weight (kg) | | | | |
|---|---|---|---|---|---|---|---|---|---|---|---|---|---|---|---|
| | L | $L_1$ | $L_2$ | $L_3$ | B | $B_1$ | h | H | i | LD | 泵 Pump | 电机 Motor | 底座 Found-ation | 其它 Other | 总重 Total weight |
| 160M | 1800 | 1200 | 600 | 300 | 720 | 670 | 145 | 160 | 125 | | 340 | 150 | 166 | 30 | |
| 160L | 1800 | 1200 | 600 | 300 | 720 | 670 | 145 | 160 | 125 | | | 170 | 166 | 30 | |
| 180M | 1800 | 1200 | 600 | 300 | 720 | 670 | 145 | 160 | 125 | | | 225 | 165 | 30 | |
| 180L | 1800 | 1200 | 600 | 300 | 720 | 670 | 145 | 160 | 125 | | | 270 | 165 | 30 | |
| 200L | 1800 | 1200 | 600 | 300 | 720 | 670 | 145 | 160 | 125 | | | 300 | 165 | 30 | |
| 225S | 1800 | 1200 | 600 | 300 | 720 | 670 | 145 | 160 | 125 | | | 390 | 161 | 30 | |
| 225M | 1800 | 1200 | 600 | 300 | 720 | 670 | 145 | 160 | 125 | | | 440 | 161 | 30 | |
| 250M | 1800 | 1200 | 600 | 300 | 720 | 670 | 145 | 160 | 125 | | | 510 | 197 | 30 | |
| 280S | 1800 | 1200 | 600 | 300 | 720 | 670 | 145 | 160 | 120 | | | 650 | 137 | 30 | |
| 280M | 1800 | 1200 | 600 | 300 | 720 | 670 | 145 | 160 | 120 | | | 800 | 137 | 30 | |

| 法兰尺寸 Flange dimension | | | | | | | | | | | | |
|---|---|---|---|---|---|---|---|---|---|---|---|---|
| 执行标准 Adopted standard | | | | | | | | | | | | |
| GB9113.1-2000 PN2.5MPa | | | | | | | ANSI B16.5 CLASS 150Lb RF (取整) | | | | | |
| 名称 Name | DN | ϕD | b | ϕK | ϕd | n-ϕd1 | DN | ϕD | b | ϕK | ϕd | n-ϕd1 |
| 泵进口法兰 Pump inlet flange | 250 | 425 | 32 | 370 | 330 | 12-ϕ30 | 250 | 406.5 | 30 | 362 | 324 | 12-ϕ26 |
| 泵出口法兰 Pump outlet flange | 200 | 360 | 30 | 310 | 274 | 12-ϕ26 | 200 | 343 | 28.5 | 298.5 | 270 | 8-ϕ22 |

## 外形及安装尺寸图 External form and installation dimension drawing

SLCZ200-400型泵 Type pump

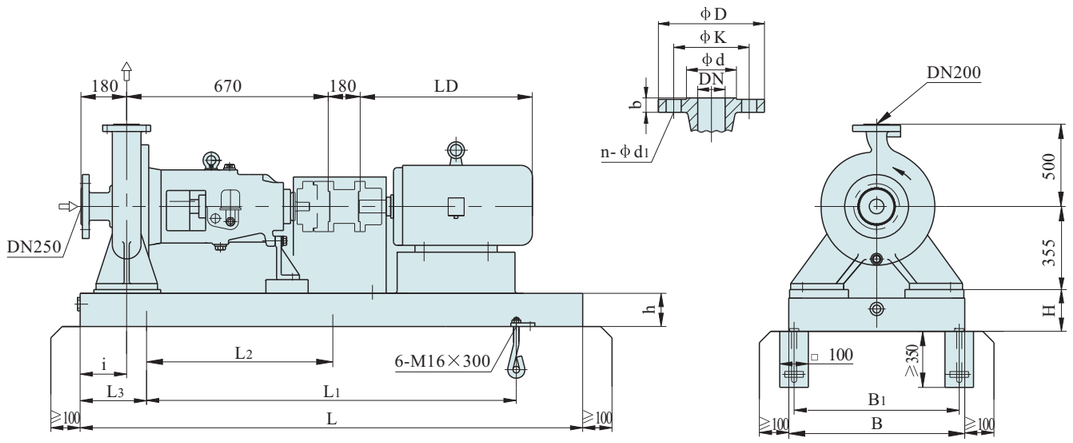


| 机座号 Foundation No. | 尺寸 Dimension (mm) | | | | | | | | | | 近似重量 Approximate weight (kg) | | | | |
|---|---|---|---|---|---|---|---|---|---|---|---|---|---|---|---|
| | L | L1 | L2 | L3 | B | B1 | h | H | i | LD | 泵 Pump | 电机 Motor | 底座 Found-ation | 其它 Other | 总重 Total weight |
| 180M | 1800 | 1200 | 600 | 300 | 720 | 670 | 145 | 160 | 125 | | 367 | 225 | 165 | 30 | |
| 180L | 1800 | 1200 | 600 | 300 | 720 | 670 | 145 | 160 | 125 | | | 270 | 165 | 30 | |
| 200L | 1800 | 1200 | 600 | 300 | 720 | 670 | 145 | 160 | 125 | | | 300 | 165 | 30 | |
| 225S | 1800 | 1200 | 600 | 300 | 720 | 670 | 145 | 160 | 125 | | | 390 | 161 | 30 | |
| 225M | 1800 | 1200 | 600 | 300 | 720 | 670 | 145 | 160 | 125 | | | 440 | 161 | 30 | |
| 250M | 1800 | 1200 | 600 | 300 | 720 | 670 | 145 | 160 | 125 | | | 510 | 197 | 30 | |
| 280S | 1800 | 1200 | 600 | 300 | 720 | 670 | 145 | 160 | 120 | | | 650 | 137 | 30 | |
| 280M | 1800 | 1200 | 600 | 300 | 720 | 670 | 145 | 160 | 120 | | | 800 | 137 | 30 | |
| 315S | 2000 | 1400 | 700 | 300 | 720 | 670 | 145 | 190 | 210 | | | 950 | 164 | 30 | |
| 315M | 2000 | 1400 | 700 | 300 | 720 | 670 | 145 | 190 | 210 | | | 1000 | 197 | 30 | |

| 法兰尺寸 Flange dimension | | | | | | | | | | | | |
|---|---|---|---|---|---|---|---|---|---|---|---|---|
| 执行标准 Adopted standard | | | | | | | | | | | | |
| GB9113.1-2000 PN2.5MPa | | | | | | | ANSI B16.5 CLASS 150Lb RF (取整) | | | | | |
| 名称 Name | DN | ϕD | b | ϕK | ϕd | n-ϕd1 | DN | ϕD | b | ϕK | ϕd | n-ϕd1 |
| 泵进口法兰 Pump inlet flange | 250 | 425 | 32 | 370 | 330 | 12-ϕ30 | 250 | 406.5 | 30 | 362 | 324 | 12-ϕ26 |
| 泵出口法兰 Pump outlet flange | 200 | 360 | 30 | 310 | 274 | 12-ϕ26 | 200 | 343 | 28.5 | 298.5 | 270 | 8-ϕ22 |





## 外形及安装尺寸图 External form and installation dimension drawing

SLCZ200-500型泵 Type pump

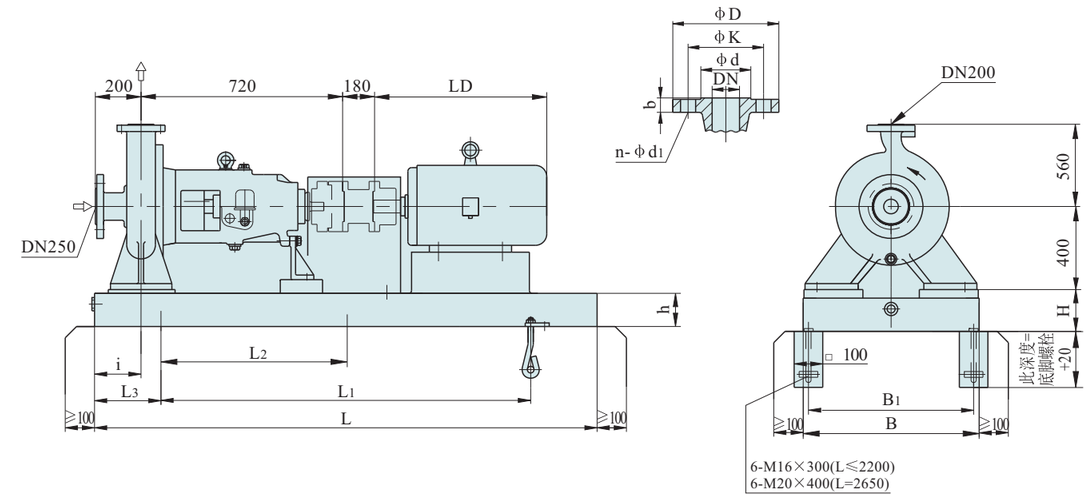


| 机座号 Foundation No. | 尺寸 Dimension (mm) | | | | | | | | | | 近似重量 Approximate weight (kg) | | | | |
|---|---|---|---|---|---|---|---|---|---|---|---|---|---|---|---|
| | L | L1 | L2 | L3 | B | B1 | h | H | i | LD | 泵 Pump | 电机 Motor | 底座 Found-ation | 其它 Other | 总重 Total weight |
| 200L | 1800 | 1200 | 600 | 300 | 720 | 670 | 145 | 160 | 125 | | 487 | 300 | 167 | 30 | |
| 225S | 1800 | 1200 | 600 | 300 | 720 | 670 | 145 | 160 | 125 | | | 390 | 167 | 30 | |
| 225M | 1800 | 1200 | 600 | 300 | 720 | 670 | 145 | 160 | 125 | | | 440 | 167 | 30 | |
| 250M | 1800 | 1200 | 600 | 300 | 720 | 670 | 145 | 160 | 125 | | | 510 | 197 | 30 | |
| 280S | 2000 | 1400 | 700 | 300 | 720 | 670 | 145 | 160 | 125 | | | 650 | 137 | 30 | |
| 280M | 2000 | 1400 | 700 | 300 | 720 | 670 | 145 | 160 | 125 | | | 800 | 193 | 30 | |
| 315S | 2200 | 1600 | 800 | 300 | 720 | 670 | 145 | 160 | 155 | | | 950 | 232 | 30 | |
| 315M | 2200 | 1600 | 800 | 300 | 720 | 670 | 145 | 160 | 155 | | | 1000 | 278 | 30 | |
| 315L | 2200 | 1600 | 800 | 300 | 720 | 670 | 126 | 160 | 155 | | | 1300 | 334 | 30 | |
| 400S | 2650 | 1920 | 960 | 365 | 970 | 920 | 180 | 215 | 200 | | | 2600 | 400 | 30 | |

| 法兰尺寸 Flange dimension | | | | | | | | | | | | |
|---|---|---|---|---|---|---|---|---|---|---|---|---|
| 执行标准 Adopted standard | | | | | | | | | | | | |
| GB9113.1-2000 PN2.5MPa | | | | | | | ANSI B16.5 CLASS 150Lb RF (取整) | | | | | |
| 名称 Name | DN | ϕD | b | ϕK | ϕd | n-ϕd1 | DN | ϕD | b | ϕK | ϕd | n-ϕd1 |
| 泵进口法兰 Pump inlet flange | 250 | 425 | 32 | 370 | 330 | 12-ϕ30 | 250 | 406.5 | 30 | 362 | 324 | 12-ϕ26 |
| 泵出口法兰 Pump outlet flange | 200 | 360 | 30 | 310 | 274 | 12-ϕ26 | 200 | 343 | 28.5 | 298.5 | 270 | 8-ϕ22 |

## 外形及安装尺寸图 External form and installation dimension drawing

SLCZ250-315型泵 Type pump

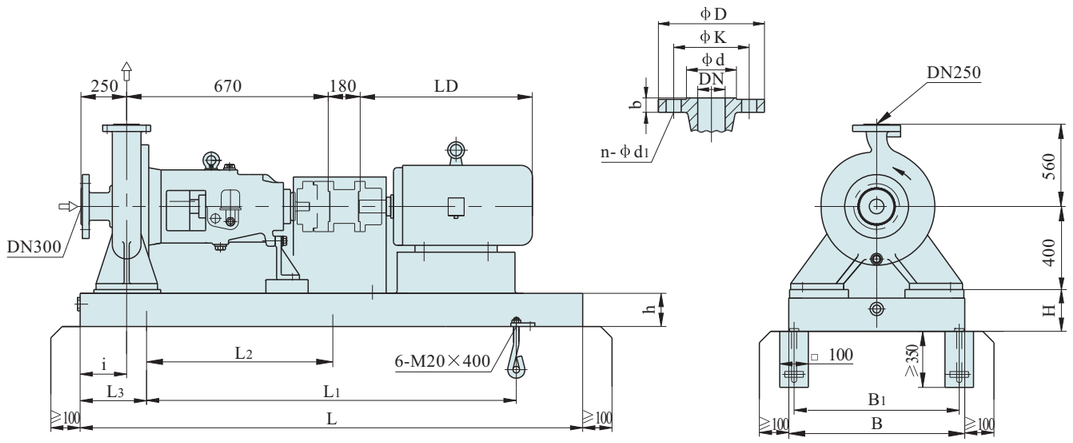


| 机座号 Foundation No. | 尺寸 Dimension (mm) | | | | | | | | | | 近似重量 Approximate weight (kg) | | | | |
|---|---|---|---|---|---|---|---|---|---|---|---|---|---|---|---|
| | L | L1 | L2 | L3 | B | B1 | h | H | i | LD | 泵 Pump | 电机 Motor | 底座 Found-ation | 其它 Other | 总重 Total weight |
| 200L | 1800 | 1200 | 600 | 300 | 780 | 730 | 185 | 200 | 155 | | 453 | 390 | 167 | 30 | |
| 225S | 1800 | 1200 | 600 | 300 | 780 | 730 | 185 | 200 | 155 | | | 440 | 200 | 30 | |
| 225M | 1800 | 1200 | 600 | 300 | 780 | 730 | 185 | 200 | 155 | | | 510 | 200 | 30 | |
| 250M | 1800 | 1200 | 600 | 300 | 780 | 730 | 185 | 200 | 155 | | | 650 | 197 | 30 | |
| 280S | 2000 | 1400 | 700 | 300 | 780 | 730 | 185 | 200 | 155 | | | 800 | 234 | 30 | |
| 280M | 2000 | 1400 | 700 | 300 | 780 | 730 | 185 | 200 | 155 | | | 950 | 280 | 30 | |
| 315S | 2000 | 1400 | 700 | 300 | 780 | 730 | 185 | 200 | 155 | | | 1000 | 336 | 30 | |
| 315M | 2000 | 1400 | 700 | 300 | 780 | 730 | 185 | 200 | 155 | | | 1300 | 403 | 30 | |

| 法兰尺寸 Flange dimension | | | | | | | | | | | | |
|---|---|---|---|---|---|---|---|---|---|---|---|---|
| 执行标准 Adopted standard | | | | | | | | | | | | |
| GB9113.1-2000 PN2.5MPa | | | | | | | ANSI B16.5 CLASS 150Lb RF (取整) | | | | | |
| 名称 Name | DN | ϕD | b | ϕK | ϕd | n-ϕd1 | DN | ϕD | b | ϕK | ϕd | n-ϕd1 |
| 泵进口法兰 Pump inlet flange | 300 | 485 | 34 | 430 | 389 | 16-ϕ30 | 300 | 482.6 | 32 | 432 | 381 | 12-ϕ26 |
| 泵出口法兰 Pump outlet flange | 250 | 425 | 32 | 370 | 330 | 12-ϕ30 | 250 | 406.5 | 30 | 362 | 324 | 12-ϕ26 |





## 外形及安装尺寸图 External form and installation dimension drawing

SLCZ250-400型泵 Type pump

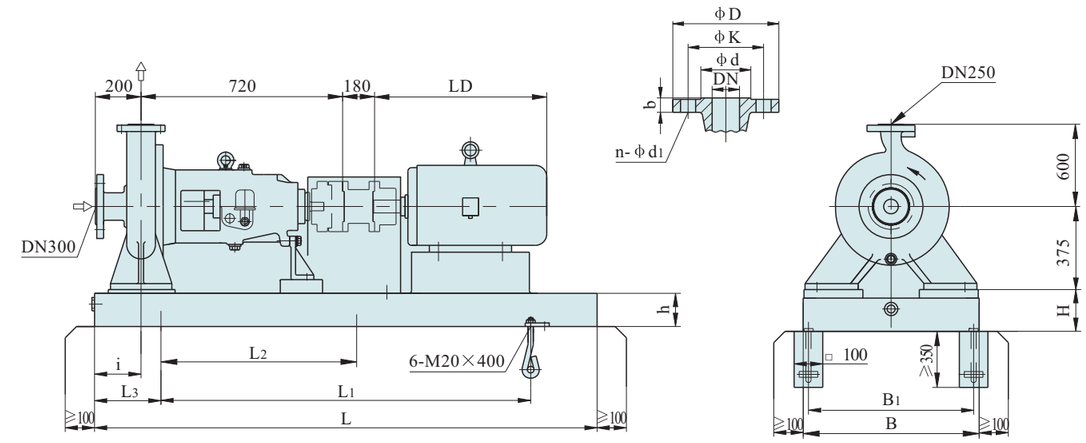


| 机座号 Foundation No. | 尺寸 Dimension (mm) | | | | | | | | | | 近似重量 Approximate weight (kg) | | | | |
|---|---|---|---|---|---|---|---|---|---|---|---|---|---|---|---|
| | L | L1 | L2 | L3 | B | B1 | h | H | i | LD | 泵 Pump | 电机 Motor | 底座 Found-ation | 其它 Other | 总重 Total weight |
| 225S | 1800 | 1200 | 600 | 300 | 870 | 820 | 170 | 170 | 165 | | 490 | 390 | 202 | 30 | |
| 225M | 1800 | 1200 | 600 | 300 | 870 | 820 | 170 | 170 | 165 | | | 440 | 202 | 30 | |
| 250M | 1800 | 1400 | 700 | 300 | 870 | 820 | 170 | 200 | 165 | | | 510 | 230 | 30 | |
| 280S | 2000 | 1400 | 700 | 300 | 870 | 820 | 170 | 200 | 165 | | | 650 | 247 | 30 | |
| 280M | 2000 | 1400 | 700 | 300 | 870 | 820 | 170 | 200 | 165 | | | 800 | 250 | 30 | |
| 315S | 2200 | 1600 | 800 | 300 | 870 | 820 | 170 | 230 | 165 | | | 950 | 300 | 30 | |
| 315M | 2200 | 1600 | 800 | 300 | 870 | 820 | 170 | 230 | 165 | | | 1000 | 360 | 30 | |
| 315L | 2200 | 1600 | 800 | 300 | 870 | 820 | 160 | 200 | 165 | | | 1300 | 432 | 30 | |

| 法兰尺寸 Flange dimension | | | | | | | | | | | | |
|---|---|---|---|---|---|---|---|---|---|---|---|---|
| 执行标准 Adopted standard | | | | | | | | | | | | |
| GB9113.1-2000 PN2.5MPa | | | | | | | ANSI B16.5 CLASS 150Lb RF (取整) | | | | | |
| 名称 Name | DN | ϕD | b | ϕK | ϕd | n-ϕd1 | DN | ϕD | b | ϕK | ϕd | n-ϕd1 |
| 泵进口法兰 Pump inlet flange | 300 | 485 | 34 | 430 | 389 | 16-ϕ30 | 300 | 482.6 | 32 | 432 | 381 | 12-ϕ26 |
| 泵出口法兰 Pump outlet flange | 250 | 425 | 32 | 370 | 330 | 12-ϕ30 | 250 | 406.5 | 30 | 362 | 324 | 12-ϕ26 |

## 外形及安装尺寸图 External form and installation dimension drawing

SLCZ250-500型泵 Type pump

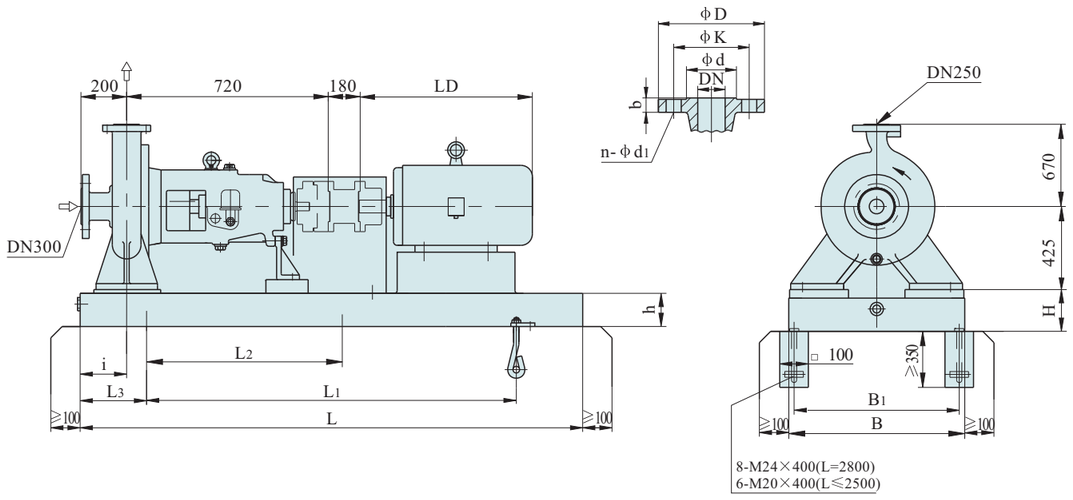


| 机座号 Foundation No. | 尺寸 Dimension (mm) | | | | | | | | | | 近似重量 Approximate weight (kg) | | | | |
|---|---|---|---|---|---|---|---|---|---|---|---|---|---|---|---|
| | L | L1 | L2 | L3 | B | B1 | h | H | i | LD | 泵 Pump | 电机 Motor | 底座 Found-ation | 其它 Other | 总重 Total weight |
| 250M | 2000 | 1200 | 700 | 300 | 870 | 820 | 170 | 200 | 165 | | 568 | 510 | 218 | 30 | |
| 280S | 2000 | 1200 | 700 | 300 | 870 | 820 | 170 | 200 | 165 | | | 650 | 258 | 30 | |
| 280M | 2000 | 1200 | 700 | 300 | 870 | 820 | 170 | 200 | 165 | | | 800 | 258 | 30 | |
| 315S | 2200 | 1600 | 800 | 300 | 870 | 820 | 170 | 200 | 165 | | | 950 | 310 | 30 | |
| 315M | 2200 | 1600 | 800 | 300 | 870 | 820 | 170 | 200 | 165 | | | 1000 | 372 | 30 | |
| 315L | 2200 | 1600 | 800 | 300 | 870 | 820 | 160 | 200 | 165 | | | 1300 | 446 | 30 | |
| 355M | 2500 | 1800 | 900 | 350 | 970 | 920 | 180 | 210 | 200 | | | 1500 | 535 | 30 | |
| 400M | 2800 | 2100 | 700 | 350 | 970 | 920 | 200 | 230 | 165 | | | 1600 | 642 | 30 | |

| 法兰尺寸 Flange dimension | | | | | | | | | | | | |
|---|---|---|---|---|---|---|---|---|---|---|---|---|
| 执行标准 Adopted standard | | | | | | | | | | | | |
| GB9113.1-2000 PN2.5MPa | | | | | | | ANSI B16.5 CLASS 150Lb RF (取整) | | | | | |
| 名称 Name | DN | ϕD | b | ϕK | ϕd | n-ϕd1 | DN | ϕD | b | ϕK | ϕd | n-ϕd1 |
| 泵进口法兰 Pump inlet flange | 300 | 485 | 34 | 430 | 389 | 16-ϕ30 | 300 | 482.6 | 32 | 432 | 381 | 12-ϕ26 |
| 泵出口法兰 Pump outlet flange | 250 | 425 | 32 | 370 | 330 | 12-ϕ30 | 250 | 406.5 | 30 | 362 | 324 | 12-ϕ26 |





## 外形及安装尺寸图 External form and installation dimension drawing

SLCZ300-400型泵 Type pump

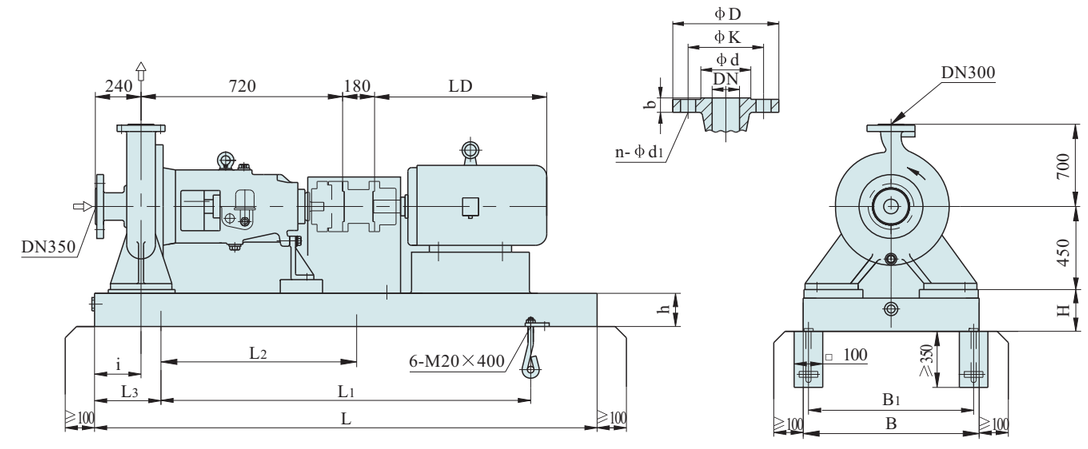


| 机座号 Foundation No. | 尺寸 Dimension (mm) | | | | | | | | | | 近似重量 Approximate weight (kg) | | | | |
|---|---|---|---|---|---|---|---|---|---|---|---|---|---|---|---|
| | L | L1 | L2 | L3 | B | B1 | h | H | i | LD | 泵 Pump | 电机 Motor | 底座 Found-ation | 其它 Other | 总重 Total weight |
| 280S | 2000 | 1400 | 700 | 300 | 870 | 820 | 170 | 200 | 165 | | 604 | 650 | 258 | 30 | |
| 280M | 2000 | 1400 | 700 | 300 | 870 | 820 | 170 | 200 | 165 | | | 800 | 258 | 30 | |
| 315S | 2300 | 1700 | 850 | 300 | 870 | 820 | 170 | 200 | 165 | | | 950 | 310 | 30 | |
| 315M | 2300 | 1700 | 850 | 300 | 870 | 820 | 170 | 200 | 165 | | | 1000 | 372 | 30 | |
| 315L | 2300 | 1700 | 850 | 300 | 870 | 820 | 200 | 230 | 165 | | | 1300 | 446 | 30 | |
| 355S | 2240 | 1600 | 800 | 320 | 970 | 900 | 140 | 250 | 165 | | | 1500 | 535 | 30 | |
| 355M | 2240 | 1600 | 800 | 320 | 970 | 900 | 140 | 250 | 165 | | | 1500 | 535 | 30 | |

| 法兰尺寸 Flange dimension | | | | | | | | | | | | |
|---|---|---|---|---|---|---|---|---|---|---|---|---|
| 执行标准 Adopted standard | | | | | | | | | | | | |
| GB9113.1-2000 PN2.5MPa | | | | | | | ANSI B16.5 CLASS 150Lb RF (取整) | | | | | |
| 名称 Name | DN | ϕD | b | ϕK | ϕd | n-ϕd1 | DN | ϕD | b | ϕK | ϕd | n-ϕd1 |
| 泵进口法兰 Pump inlet flange | 350 | 555 | 38 | 490 | 448 | 16-ϕ33 | 350 | 533.5 | 35 | 476 | 413 | 12-ϕ28.5 |
| 泵出口法兰 Pump outlet flange | 300 | 485 | 34 | 430 | 389 | 16-ϕ30 | 300 | 482.6 | 32 | 432 | 381 | 12-ϕ26 |

## 外形及安装尺寸图 External form and installation dimension drawing

SLCZ300-500型泵 Type pump

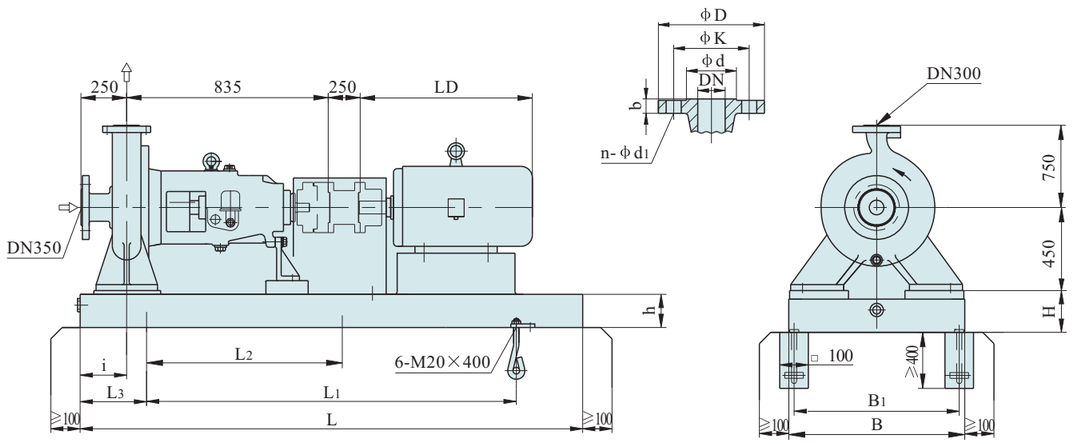


| 机座号 Foundation No. | 尺寸 Dimension (mm) | | | | | | | | | | 近似重量 Approximate weight (kg) | | | | |
|---|---|---|---|---|---|---|---|---|---|---|---|---|---|---|---|
| | L | L1 | L2 | L3 | B | B1 | h | H | i | LD | 泵 Pump | 电机 Motor | 底座 Found-ation | 其它 Other | 总重 Total weight |
| 280S | 2240 | 1600 | 800 | 320 | 970 | 920 | 145 | 230 | 225 | | 752 | 650 | 353 | 30 | |
| 280M | 2240 | 1600 | 800 | 320 | 970 | 920 | 145 | 230 | 225 | | | 800 | 357 | 30 | |
| 315S | 2240 | 1600 | 800 | 320 | 970 | 920 | 145 | 230 | 225 | | | 950 | 428 | 30 | |
| 315M | 2240 | 1600 | 800 | 320 | 970 | 920 | 145 | 230 | 225 | | | 1000 | 514 | 30 | |
| 315L | 2240 | 1640 | 820 | 400 | 970 | 920 | 200 | 236 | 250 | | | 1300 | 617 | 30 | |
| 355M | 3000 | 2200 | 1100 | 400 | 970 | 920 | 200 | 240 | 250 | | | 2450 | 740 | 30 | |

| 法兰尺寸 Flange dimension | | | | | | | | | | | | |
|---|---|---|---|---|---|---|---|---|---|---|---|---|
| 执行标准 Adopted standard | | | | | | | | | | | | |
| GB9113.1-2000 PN2.5MPa | | | | | | | ANSI B16.5 CLASS 150Lb RF (取整) | | | | | |
| 名称 Name | DN | ϕD | b | ϕK | ϕd | n-ϕd1 | DN | ϕD | b | ϕK | ϕd | n-ϕd1 |
| 泵进口法兰 Pump inlet flange | 350 | 555 | 38 | 490 | 448 | 16-ϕ33 | 350 | 533.5 | 35 | 476 | 413 | 12-ϕ28.5 |
| 泵出口法兰 Pump outlet flange | 300 | 485 | 34 | 430 | 389 | 16-ϕ30 | 300 | 482.6 | 32 | 432 | 381 | 12-ϕ26 |





## 管口载荷 Loading of pipe orifice

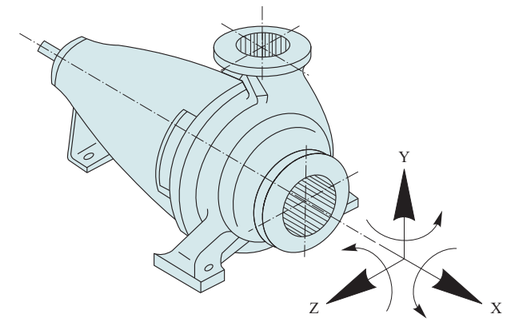


箭头表示力和力矩的方向
Arrow indicates direction of force and moment

| 规 格 Model | 出口法兰载荷 Loading of outlet flange | | | | | | | 进口法兰载荷 Loading of inlet flange | | | | | | |
|---|---|---|---|---|---|---|---|---|---|---|---|---|---|---|
| | 直径 Diameter (mm) | F(N) | | | M(Nm) | | | 直径 Diameter (mm) | F(N) | | | M(Nm) | | |
| | | Fx | Fz | Fy | Mx | Mz | My | | Fx | Fz | Fy | Mx | Mz | My |
| 32-160 | 32 | ±800 | ±1350 | +1750 -2600 | ±980 | ±490 | ±490 | 50 | ±800 | ±1350 | ±1750 | ±980 | ±490 | ±490 |
| 32-200 | 32 | ±850 | ±1420 | +1820 -2750 | ±1020 | ±510 | ±510 | 50 | ±850 | ±1420 | ±1820 | ±1020 | ±510 | ±510 |
| 32-250 | 32 | ±900 | ±1500 | +1900 -2900 | ±1040 | ±520 | ±520 | 50 | ±900 | ±1500 | ±1900 | ±1040 | ±520 | ±520 |
| 40-160 | 40 | ±850 | ±1400 | +1800 -2700 | ±1000 | ±500 | ±500 | 65 | ±850 | ±1400 | ±1800 | ±1000 | ±500 | ±500 |
| 40-200 | 40 | ±900 | ±1520 | +1920 -2900 | ±1020 | ±510 | ±510 | 65 | ±900 | ±1520 | ±1920 | ±1020 | ±510 | ±510 |
| 40-250 | 40 | ±950 | ±1600 | +1950 -2940 | ±1040 | ±520 | ±520 | 65 | ±950 | ±1600 | ±1950 | ±1040 | ±520 | ±520 |
| 40-315 | 40 | ±980 | ±1650 | +2000 -3000 | ±1080 | ±540 | ±540 | 65 | ±980 | ±1650 | ±2000 | ±1080 | ±540 | ±540 |
| 50-160 | 50 | ±900 | ±1700 | +2100 -3150 | ±1280 | ±640 | ±640 | 80 | ±900 | ±1700 | ±2100 | ±1280 | ±640 | ±640 |
| 50-200 | 50 | ±950 | ±1750 | +2150 -3220 | ±1300 | ±650 | ±650 | 80 | ±950 | ±1750 | ±2150 | ±1300 | ±650 | ±650 |
| 50-250 | 50 | ±1000 | ±1850 | +2250 -3380 | ±1320 | ±660 | ±660 | 80 | ±1000 | ±1850 | ±2250 | ±1320 | ±660 | ±660 |
| 50-315 | 50 | ±1100 | ±1950 | +2400 -3600 | ±1360 | ±680 | ±680 | 80 | ±1100 | ±1950 | ±2400 | ±1360 | ±680 | ±680 |
| 65-160 | 65 | ±1200 | ±2150 | +2700 -4000 | ±1660 | ±830 | ±830 | 100 | ±1200 | ±2150 | ±2700 | ±1660 | ±830 | ±830 |
| 65-200 | 65 | ±1300 | ±2200 | +2800 -4200 | ±1680 | ±840 | ±840 | 100 | ±1300 | ±2200 | ±2800 | ±1680 | ±840 | ±840 |
| 65-250 | 65 | ±1400 | ±2250 | +2900 -4350 | ±1700 | ±850 | ±850 | 100 | ±1400 | ±2250 | ±2900 | ±1700 | ±850 | ±850 |
| 65-315 | 65 | ±1450 | ±2350 | +3000 -4500 | ±1720 | ±860 | ±860 | 100 | ±1450 | ±2350 | ±3000 | ±1720 | ±860 | ±860 |
| 80-160 | 80 | ±1250 | ±2350 | +3000 -4500 | ±1850 | ±910 | ±910 | 125 | ±1250 | ±2350 | ±3000 | ±1850 | ±910 | ±910 |
| 80-200 | 80 | ±1300 | ±2400 | +3100 -4650 | ±1840 | ±920 | ±920 | 125 | ±1300 | ±2400 | ±3100 | ±1840 | ±920 | ±920 |
| 80-250 | 80 | ±1400 | ±2600 | +3200 -4800 | ±1900 | ±950 | ±950 | 125 | ±1400 | ±2600 | ±3200 | ±1900 | ±950 | ±950 |
| 80-315 | 80 | ±1450 | ±2700 | +3250 -4850 | ±1920 | ±960 | ±960 | 125 | ±1450 | ±2700 | ±3250 | ±1920 | ±960 | ±960 |
| 80-400 | 80 | ±1500 | ±2750 | +3300 -4950 | ±1940 | ±970 | ±970 | 125 | ±1500 | ±2750 | ±3300 | ±1940 | ±970 | ±970 |

## 管口载荷 Loading of pipe orifice

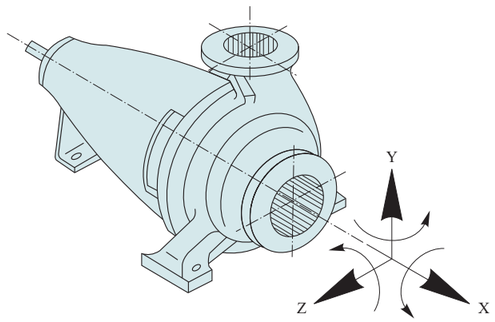


箭头表示力和力矩的方向
Arrow indicates direction of force and moment

| 规 格 Model | 出口法兰载荷 Loading of outlet flange | | | | | | | 进口法兰载荷 Loading of inlet flange | | | | | | |
|---|---|---|---|---|---|---|---|---|---|---|---|---|---|---|
| | 直径 Diameter (mm) | F(N) | | | M(Nm) | | | 直径 Diameter (mm) | F(N) | | | M(Nm) | | |
| | | Fx | Fz | Fy | Mx | Mz | My | | Fx | Fz | Fy | Mx | Mz | My |
| 100-200 | 100 | ±1500 | ±2600 | +3400 -4750 | ±2200 | ±1100 | ±1100 | 125 | ±1500 | ±2600 | ±3400 | ±2200 | ±1100 | ±1100 |
| 100-250 | 100 | ±1650 | ±2700 | +3500 -4900 | ±2240 | ±1120 | ±1120 | 125 | ±1650 | ±2700 | ±3500 | ±2240 | ±1120 | ±1120 |
| 100-315 | 100 | ±1700 | ±2750 | +3600 -5050 | ±2260 | ±1130 | ±1130 | 125 | ±1700 | ±2750 | ±3600 | ±2260 | ±1130 | ±1130 |
| 100-400 | 100 | ±800 | ±2850 | +3700 -5180 | ±2280 | ±1140 | ±1140 | 125 | ±800 | ±2850 | ±3700 | ±2280 | ±1140 | ±1140 |
| 125-250 | 125 | ±1800 | ±3500 | +4500 -6200 | ±2800 | ±1400 | ±1400 | 150 | ±1800 | ±3500 | ±4500 | ±2800 | ±1400 | ±1400 |
| 125-315 | 125 | ±2000 | ±3600 | +4650 -6400 | ±2860 | ±1430 | ±1430 | 150 | ±2000 | ±3600 | ±4650 | ±2860 | ±1430 | ±1430 |
| 125-400 | 125 | ±2100 | ±3650 | +4700 -6500 | ±2880 | ±1440 | ±1440 | 150 | ±2100 | ±3650 | ±4700 | ±2880 | ±1440 | ±1440 |
| 150-250 | 150 | ±2300 | ±4100 | +4900 -7500 | ±3350 | ±1650 | ±1650 | 200 | ±2300 | ±4100 | +4900 -7500 | ±3350 | ±1650 | ±1650 |
| 150-315 | 150 | ±2500 | ±4300 | +5100 -7700 | ±3450 | ±1700 | ±1700 | 200 | ±2500 | ±4300 | +5100 -7700 | ±3450 | ±1700 | ±1700 |
| 150-400 | 150 | ±2550 | ±4350 | +5200 -7800 | ±3500 | ±1750 | ±1750 | 200 | ±2550 | ±4350 | +5200 -7800 | ±3500 | ±1750 | ±1750 |
| 150-500 | 150 | ±2600 | ±4400 | +5300 -7900 | ±3550 | ±1800 | ±1800 | 200 | ±2600 | ±4400 | +5300 -7900 | ±3550 | ±1800 | ±1800 |
| 200-250 | 200 | ±2700 | ±4900 | +6100 -9200 | ±4000 | ±2000 | ±2000 | 200 | ±2700 | ±4900 | +6100 -9200 | ±4000 | ±2000 | ±2000 |
| 200-315 | 200 | ±3200 | ±5400 | +6500 -9800 | ±4450 | ±2230 | ±2230 | 250 | ±3200 | ±5400 | +6500 -9800 | ±4450 | ±2230 | ±2230 |
| 200-400 | 200 | ±3300 | ±5500 | +6700 -10000 | ±4500 | ±2250 | ±2250 | 250 | ±3300 | ±5500 | +6700 -10000 | ±4500 | ±2250 | ±2250 |
| 200-500 | 200 | ±3400 | ±5600 | +7000 -10400 | ±4600 | ±2300 | ±2300 | 250 | ±3400 | ±5600 | +7000 -10400 | ±4600 | ±2300 | ±2300 |
| 250-315 | 250 | ±3800 | ±6500 | +7800 -11700 | ±4900 | ±2450 | ±2450 | 300 | ±3800 | ±6500 | +7800 -11700 | ±4900 | ±2450 | ±2450 |
| 250-400 | 250 | ±4000 | ±6700 | +8100 -12000 | ±5200 | ±2600 | ±2600 | 300 | ±4000 | ±6700 | +8100 -12000 | ±5200 | ±2600 | ±2600 |
| 250-500 | 250 | ±4100 | ±6800 | +8200 -12100 | ±5300 | ±2650 | ±2650 | 300 | ±4100 | ±6800 | +8200 -12100 | ±5300 | ±2650 | ±2650 |
| 300-400 | 300 | ±4750 | ±7900 | +9600 -14000 | ±6400 | ±3200 | ±3200 | 350 | ±4750 | ±7900 | +9600 -14000 | ±6400 | ±3200 | ±3200 |
| 300-500 | 300 | ±4900 | ±8100 | +10000 -14500 | ±6700 | ±3350 | ±3350 | 350 | ±4900 | ±8100 | +10000 -14500 | ±6700 | ±3350 | ±3350 |





## 泵体材料介质适应表 Table of the pump casing materials suitable for the media

### 符号说明 Symbol meaning

| 符号 symbol | 说明(耐蚀情况，腐蚀率、毫米/年) Notice(about corrosion resisting, corrosive rate:mm/year) | |
|---|---|---|
| A | 优良，<0.05 | Excellet,<0.05 |
| B | 良好，<0.05～0.5 | Good,<0.05～0.5 |
| C | 可用，但腐蚀较重，0.5～1.5 | Use, but severe corrosive, 0.5～1.5 |
| D | 不适用，腐蚀严重，>1.5 | Unsuitable, severe corrosive,>1.5 |
| * | 可能产生应力腐蚀破裂 | Possibly to produce stress corroded cracking |
| △ | 溶液或介质变色 | Color change with solution or medium |
| ø | 可能产生晶间腐蚀 | Possibly to form corrosion between crystals |
| ∞ | 可能产生孔蚀 | Possibly to produce hole corrosion |

### 铸铁和低碳钢泵适应介质表
### Table of the media sutable to both cast iron and low carbon steel made pumps

| 介质名称 Medium name | 浓度 Concentration (%) | 温度 Temperature (℃) | | | |
|---|---|---|---|---|---|
| | | 25 | 50 | 80 | 100 |
| 过氧化氢(双氧水) Hydrogen peroxide | 10 | B | B | B | B |
| | 20～40 | D | | | |
| 氨 水 Ammonia | <30 | A | B | B | B |
| | 40 | A | | | |
| 甲 醇 Methanol | <100 | B | B | B | B |
| | 100 | A | A | A | A |
| 乙 醇 Ethanol | <100 | A | A | A | |
| | 100 | A | A | A | A |
| 丙 醇 Propyl alcohol | | A | A | A | A |
| 丁 醇 Butanol | | A | A | A | A |
| | | B(120) | | | |
| 甲 醛 Ormaldehyde | 10～30 | D | | | |
| | 40～50 | C | | | |
| | 80～90 | | | D | D |
| | 100 | A | A | A | A |
| 乙 醛 Acetaldehyde | 10 | C | C | | |
| | 100 | A | A | A | |
| 丙 醛 Propionic aldehyde | | A | A | | |
| 丁 醛 Butyric aldehyde | | A | A | A | A |
| (二)甲醚 Dimethyl ether | | B | B | B | B |
| 丙 酮 Acetone | <100 | B | | | |
| | 100 | A | A | A | A |
| | | A(120) | | | |
| 甲 烷 Methane | | A | A | A | A |
| | | A(120) | | | |

| 介质名称 Medium name | 浓度 Concentration (%) | 温度 Temperature (℃) | | | |
|---|---|---|---|---|---|
| | | 25 | 50 | 80 | 100 |
| 乙 烷 Elayl | | A | A | A | A |
| | | A(120) | | | |
| 乙 烯 Ethane | | A | A | A | A |
| 丙 烷 Propane | | A | A | A | A |
| | | A(120) | | | |
| 丁 烷 Tetrane | | A | A | A | A |
| 汽油(高辛烷值) Gasoline(high octane value) | | B | B | B | |
| 汽油(喷汽机燃料) Gasoline(fuel for oil sprayer) | | B | B | B | |
| 汽油 (含$H_2S$) Gasoline(containing $H_2S$) | | B | | | |
| 汽油(含HCL，$SO_2$，$H_2O$) Gasoline(containing HCL, $SO_2$, $H_2O$) | | C | C | | |
| 煤 油 Coal oil | | B | B | B | B |
| 三乙醇胺 Triethanolamine | | B | B | B | B |
| 植物油 Vegetable oil | 100 | A | A | A | A |
| | | A | D | | |
| | 90 | D | 产生催化 Producing catalyze | | |
| 豆油 Soy bean oil | | B | B | | |
| 玉米油 Corn oil | | B | B | B | |
| 棉籽油 Cottonseed oil | | B | B | B | |
| 饮用水 Drinking water | | B | B | B | |
| 高纯水 High pure water | | A | | | |
| | | A | A | | |
| 海 水 Sea water | 流 速 Flowrate | | | | |
| | <1.5m/s | B | | | |
| | >1.5m/s | D | D | | |
| 水 PH=7 Water PH=7 | | C | C | C | C |

| 介质名称 Medium name | 浓度 Concentration (%) | 温度 Temperature (℃) 25 | 50 | 80 | 100 |
|---|---|---|---|---|---|
| 水 PH<7 Water PH<7 | | D | | | |
| 水 PH>7 Water PH>7 | | A | B | | |
| 硫 酸 Sulphuric acid | <65 | D | D | | |
| | 65～75 | C | C | D | D |
| | 75～100① | B | C | D | D |

| 介质名称 Medium name | 浓度 Concentration (%) | 温度 Temperature (℃) 25 | 50 | 80 | 100 |
|---|---|---|---|---|---|
| | 100 | B | B | C | |
| 铬 酸 Chromic acid | <25 | D | | | |
| | 30～80 | B | | | |
| | 100 | A | | | |
| 硼 酸 Boratic acid | <10 | C | C | C | C |
| | | C(120) | | | |
| | >10 | D | | D | |
| 70～90%硫酸+硝酸 70～90% sulphuric acid+nitric acid | | A | | | |
| 氢氧化钠 Sodium hydroxide | <30② | A | B | B | B* |
| | | D*(200) | | | |
| | 30～40 | A | B | B | C |
| | 50～60 | B | B | D | D |
| | | D*(200) | | | |
| | 80 | B | D | D | D |
| | 90 | | | D | D |
| | 100 | B | | D | |
| | | D*(370) | | | |
| 氢化铵 Ammonium hydride | <10 | C | D | | |
| | 10～99 | D | D | | |
| | 100 | B | | | |
| 硫酸钠(PH>7) Sodium sulphate(PH>7) | | B | B | B | B |
| 硝酸钠 Sodium nitrate | <90 | A | A | B | C |
| | 100 | A | A | A | A |
| | | B(120) | | | |
| 碳酸钠 Sodium carbonate | | A | A | A | A |
| 氯化钠(含氧) Solidum chloride (containing oxygen) | 10 | D③ | C | C | D |
| | 20～30 | C | | | D |
| | 100 | A | | | |
| 氧化钠 Sodium cyanide | 10 | A | A | A | A |
| | | A(120) | | | |
| | 20～90 | A | A | A | A |

| 介质名称 Medium name | 浓度 Concentration (%) | 温度 Temperature (℃) 25 | 50 | 80 | 100 |
|---|---|---|---|---|---|
| 氢氟酸 (不含氧) Hydrofluoric acid (containing no oxygen) | <70 | D | D | | |
| | 70～90 | C | | | |
| | 100 | B | B | | |
| 氢氟酸 (含氧) Hydrofluoric acid (containing oxygen) | <70 | B | B | | |
| | 70～90 | C | | | |

| 介质名称 Medium name | 浓度 Concentration (%) | 温度 Temperature (℃) 25 | 50 | 80 | 100 |
|---|---|---|---|---|---|
| | 100 | A | A | A | A |
| | | B(120) | | | |
| 碳酸氢钠 Sodium bicarbonate | <100 | B | B | B | B |
| | 100 | C | | | |
| 硅酸钠 Sodium silicate | | B | B | B | B |
| | | B(120) | | | |
| 柠檬酸钠 Sodium citrate | 10 | D | | | |
| | 100 | A | | | |
| 硫酸钾△ Potassium sulphate△ | 10～20 | B | B | B | D③ |
| | | D | | | |
| | 100 | A | | | |
| 硝酸钾 Potassium nitrate | <90 | B | B | B | B |
| | 100 | A | A | A | A |
| | | A(120) | | | |
| 氟化钾 Potassium fluoride | 20 | B | B | B | |
| | 100 | A | B | B | B |
| 氧化钾 Potassium cyanide | <50 | C④ | C | C | C |
| | 60～70 | | | C | C |
| | 80～90 | B | | | C |
| | 100 | B | B | B | B |
| | | C(120) | | | |
| 重铬酸钾 Heavy Potassium chromate | <60 | B | B | B | B |
| | | B | 120 | | |
| | 100 | B | B | B | B |
| 高锰酸钾 Potassium permanganate | <100 | B | B | B | C |
| | 100 | B | | | |
| 氯化钙 Lime chloride | 10 | A | A | A | A |
| | | A(120) | | | |
| | 20～70 | B | B | C | D |
| | 100 | A | A | A | A |
| | | | A(120) | | |
| 氟化钙 Calcium fluoride | 90 | C | | | |
| | 100 | B | B | B | B |

注：①高转速泵、阀，以用高铬镍不锈钢为好。铸铁优于碳钢，可用于80～100℃以下。②铸铁不耐100℃。③铸铁为C。④铸铁为D。
Note：①It is better to use the high Cr-Ni stainless steel for the pump and valve of a high rotating speed.Cast iron is better than carbon steel. May be used below 80～100℃.
②Cast iron does not withstand 100℃. ③Cast iron to be C. ④Cast iron to be D.





## 铬18镍19不锈钢(304，304L)泵适应介质表
## Table of the media suitable to the pump made of cr18ni9 stainless steel(304,304L)

| 介质名称 Medium name | 浓度 Concentration (%) | 温度 Temperature(℃) 25 | 50 | 80 | 100 |
|---|---|---|---|---|---|
| 无机酸 Inorganic acid | | | | | |
| 硫酸*(不充气) Shlphuric acid* (without gas filled) | <5 | B | D | | |
| | 10～80 | D | D | | |
| | 90 | B | D | | |
| | 100 | B | C | | D |
| 硫酸*(充气) Shlphuric acid* (gas filled) | <20 | C | D | | |
| | 30～60 | D | D | | |
| | 70～80 | C | D | | |
| | 90～100 | B | C | D | D |
| 发烟硫酸 Fuming sulphuric acid | | D | | | |
| 硝 酸 Nitric acid | <30 | A | A | A | A |
| | | C(120) | | D(150) | |
| | 40～60 | | | | |
| | | | | | |
| | 70 | | | | |
| 盐 酸 Chlorhydric acid | | D | | | |
| 磷 酸 Phosphoric acid | <5 | B | B | B | B |
| | | B(沸点) B(Boiling point) | | | |
| | 10 | B | D | D | D |
| | | D(沸点) D(Boiling point) | | | |
| | 10～85 | D | | | |
| 氢氧酸(不充气)*∞ Hydrofluoric acid (without gas filled)*∞ | <100 | D | | | |
| | 100 | B | D | | |
| 氢氟酸(充气) Hydrofluoric acid (gas filled)*∞ | | D | | D | |
| 铬 酸*∞ Chromic acid*∞ | <10 | B | C | C | |
| | | C(沸点) C(Boiling point) | | | |
| | 20～30 | B | D | D | D |
| | 50 | D | | | |
| | 100 | D | | | |
| 硼 酸∞ Boratic acid∞ | <30 | A | A | A | A |
| | | A(沸点) A(Boiling point) | | | |
| | 40 | B | B | B | B |
| | | B(150) | | | |
| | 50 | B | B | B | B |

| 介质名称 Medium name | 浓度 Concentration (%) | 温度 Temperature(℃) 25 | 50 | 80 | 100 |
|---|---|---|---|---|---|
| | | C(200) | | | |
| 硼 酸∞ Boratic acid∞ | 70～80 | D | | | |
| | 70～80 | D(120) | | | |
| | 100 | B | B | | |
| | | D(200) | | | |
| 混酸：硫酸＞50%+硝酸<50%+水>20% Mixed acid: sulphuric acid>50%+nitric acid <50%+water>20% | | B | B | B | D(沸点) D(Boiling point) |
| 硫酸20～60%+硝酸<25%+水>20% Sulphuric acid 20～60%+nitric acid<25%+water>20% | | D | | | |
| 硫酸15%+硝酸5%+水80% Sulphuric acid 15%+nitric acid 5%+water 80% | | B | B | B | B (沸104) (Boiled 104) |
| 氢氧化钠 Sodium hydroxide | <50 | A | C | C | D |
| | | D*(200) | | | |
| | 70* | B | B | B | D* |
| | | D*(200) | | | |
| | 80* | B | B | B | D |
| | | D*(200) | | | |
| | 100 | B | B | B | B |
| | | C(316) | | D(370) | |
| 氢氧化钾* Potassium hydroxide* | <50 | B | B | B | B |
| | | B(沸点) B(Boiling point) | | | |
| | 50 | B | B | B | D |
| | | D(200) | | | |
| | 60～70 | B | B | B | C |
| | | C(120) | | | |
| | 80 | B | | | D |
| | | D(200) | | | |
| 氢氧化钾 Potassium hydroxide | 100 | A | | | |
| | | D(250) | | | |
| 硫酸钠* Sodium sulphate* | | A | A | A | A |
| | | A(200) | | B(840) | |

## 铸铁和低碳钢泵适应介质表
## Table of the media suitable to the pump made of cast iron and low carbon steel

| 介质名称 Medium name | 浓度 Concentration (%) | 温度 Temperature(℃) 25 | 50 | 80 | 100 |
|---|---|---|---|---|---|
| 硝酸钠∞ Sodium nitrate∞ | <70 | A | A | A | A |
| | | A(沸点) A(Boiling point) | | | |
| | 100 | B | | D | |
| | | D(510) | | | |
| 碳酸钠 Sodium carbonate | 10 | A | A | A | A |
| | | A(沸点) A(Boiling point) | | | |
| | 20~40 | B | B | A | A |
| | 100 | A | A | A | B |
| 碳酸钠 Sodium carbonat | 100 | D*(400) | | D*(900) | |
| 氯化钠*∞ Sodium chloride*∞ | 10~30 | B | B | B | B |
| | | B(沸点) B(Boiling point) | | | |
| | 90 | D | | | |
| | 100 | B | B | B | |
| | | D(260) | | D(700) | |
| 氰化钠 Sodium cyanide | 10 | A | A | A | A |
| | 20~30 | A | | | |
| | 40~100 | A | A | A | D |
| | | D(700) | | | |
| 硅酸钠 Sodium silicate | | A | A | A | A |
| | | D(800) | | | |
| 醋酸钠∞ Sodium acetate∞ | 10 | A | A | A | A |
| | | A(150) | | | |
| | 20~60 | B | B | B | B |
| | 100 | B | B | B | B |
| | | B(370) | | | |
| 柠檬酸钠 Sodium citrate | <40 | B | B | B | B |
| | 100 | B | | | |
| 硫酸钾 Potassium sulphate | <饱和 | A | A | A | A |
| | | A(沸点) A(Boiling point) | | | |
| | 100 | D(200) | | | |
| 硝酸钾 Saturation | <80 | B | B | B | B |
| | | B(沸点) B(Boiling point) | | | |
| | 100 | A | A | A | A |
| | | A(560) | | | |
| 氟化钾 Potassium fluoride | | B | B | B | B |
| 氰化钾 Potassium cyanide | <30 | A | A | A | A |
| | 40~ | B | B | B | B |

| 介质名称 Medium name | 浓度 Concentration (%) | 温度 Temperature(℃) 25 | 50 | 80 | 100 |
|---|---|---|---|---|---|
| 氰化钾 Potassium cyanide | 90 | | | | |
| | 100 | B | | | |
| 重铬酸钾 Heavy potassium chromate | <30 | A | A | A | A |
| | | A(沸点) A(Boiling point) | | | |
| | 40～60 | A | A | A | A |
| | 100 | B | | | |
| 高锰酸钾 Potassium permanganate | <30 | B | B | B | B |
| | | B(沸点) B(Boiling point) | | | |
| | 100 | B | | | |
| 氯化钙*∞ Calcium chloride*∞ | <20 | A | A | A | D |
| | 30～80 | B | B | B | D |
| | 100 | B | | | |
| | | D(150) | | | |
| 氟化钙 Calcium fluoride | 10 | A | A | A | A |
| | 100 | A | A | A | A |
| 过氧化氢(PH>7) Solozone(PH>7) (双氧水) (Hydrogen peroxide solution) | 10～40 | B | B | B | B |
| | | B(沸点) B(Boiling point) | | | |
| | 90 | A | A | | |
| | 100 | B | | | C |
| 氨 水 Ammonium water | | A | A | A | A |
| 氨 (无水) Ammonium (free of water) | | A | A | A | A |
| | | A(316) | | A(500) | |
| 甲 醇 Methanol | <100 | A | A | A | A |
| | 100 | A | A | A | C |
| 乙 醇 Alcohol | | A | B | B | B |
| 丙 醇 Propanol | | A | A | A | A |
| 丁 醇 Butanol | | A | A | A | A |
| 甲 醛∞ Formaldehyde∞ | <40 | A | A | A | A |
| | | A(150) | | | |
| | 50 | A | A | B | B |
| | | B(300) | | | |
| | 60～70 | A | A | | |
| | 80～90 | A | A | A | |
| | 100 | A | | | |
| 乙 醛 Acetaldehyde | | A | A | A | A |
| 丙 醛 Propionic aldehyde | | A | | | |
| 丁 醛 Butyric aldehyde | | A | A | A | A |
| (二)甲醚 Dimethyl ether | | B | B | B | B |





| 介质名称 Medium name | 浓度 Concent-ration (%) | 温度 Temperature(℃) 25 | 50 | 80 | 100 |
|---|---|---|---|---|---|
| 乙 醚 Ethyl ether | | A | A | A | A |
| 丙 酮 Acetone | | A | A | A | A |
| 甲 烷 Methane | | A | A | A | A |
| | | A(370) | | | |
| 乙 烷 Ethane | | A | A | A | A |
| | | A(316) | | | |
| 丙烷 (液及气) Propane(liuid and gas) | | A | A | A | A |
| 丁 烷 Tetrane | | A | A | A | A |
| 汽油(高辛烷值) Gasoline(high value of octane) | | B | B | B | |
| 汽油(喷汽机燃料) Gasoil(fuel of steam sprayer) | | B | B | B | |
| 煤 油 Coal oil | | A | A | A | A |
| | | A(200) | | | |
| 三乙醇胺 Triethanolamine | | B | B | B | B |

| 介质名称 Medium name | 浓度 Concent-ration (%) | 温度 Temperature(℃) 25 | 50 | 80 | 100 |
|---|---|---|---|---|---|
| 植物油 Vegetable oil | | A | A | A | A |
| | | A(350) | | | |
| 豆 油 Soy bean oil | | A | A | A | A |
| 玉米油 Corn oil | | A | A | A | A |
| 棉子油 Cottonseed oil | | A | A | A | A |
| 饮用水 Drinking water | | A | A | A | A |
| 海 水 Sea water | 流 速 Flowrate | | | | |
| | <1.5m/s | A∞ | | A | |
| | >1.5m/s | A∞ | | | |

## 铬18镍12钼(钛)(316,316L)不锈钢泵的适应介质表
## Table of the media suitable to the pump made of Cr18Ni12Mo(Ti) (316,316L) stainless steel

| 介质名称 Medium name | 浓度 Concent-ration (%) | 温度 Temperature(℃) 25 | 50 | 80 | 100 |
|---|---|---|---|---|---|
| 硫酸*(充气) Vitriol* (gas filled) | <5 | B | B | D | D |
| | 10～30 | B | C | D | D |
| | 40～50 | C | D | D | |
| | 60～70 | D | D | D | |
| | 90 | B① | C | D | D |
| | 100 | B | C | C | C |
| | | D(120) | | | |
| 硫酸*(不充气) Vitriol* (without gas filled) | <5 | B | D | D | D |
| | 20～80 | D | D | D | D |
| | 80～90 | B | D | D | |
| | 100 | B | B | B | C |
| 硝 酸 Nitric acid | <20 | A | A | A | A |
| | | C(120) | | D(150) | |
| | 30～60 | A | B | B | B |
| | | D(120) | | | |
| | 70 | A | B | B | |
| | 80 | A | B | D | |
| | 90 | A | D | | |
| | 100 | A② | D | | |
| 磷酸*(充气) Phosphoric acid (gas filled) | <25 | A | A | A | A |
| | | A(沸点) A(Boiling point) | | D(>120) | |
| | 25-50 | A | A | A | B |

| 介质名称 Medium name | 浓度 Concent-ration (%) | 温度 Temperature(℃) 25 | 50 | 80 | 100 |
|---|---|---|---|---|---|
| | | D(120) | | | |
| | 50～85 | A | B | B | B |
| | | D(120) | | | |
| | 90 | D | | | |
| | 100 | B | | | |
| 磷酸*(不含氧) Phosphoric acid*(containing no oxygen) | | B | B | B | B |
| 氢氟酸(不充气) Hydrofluoric acid (without gas filled) | <100 | D | | | |
| | 100 | B | | | |
| 氢氟酸(充气) Hydrofluoric acid (gas filled) | <10 | B | | | |
| | 10～90 | D | | | |
| | 100 | B | | | |
| 碳 酸 Carbethylic acid | 10 | B | | | |
| | 30 | | | | A |
| | 100 | A | A | A | A |
| | | A(816) | | | |
| 铬 酸 Chromic acid | | D | | | D |
| 氯 酸∞ Chloric acid∞ | | D | | | |
| 四磷酸 Tetra-phosphoric acid | | B | | | |
| 硼 酸∞ Boratic acid∞ | <10 | A | A | A | A |
| | | A(沸点) A(Boiling point) | | | |
| | 20～50 | B | B | B | B |

| 介质名称 Medium name | 浓度 Concentration (%) | 温度 Temperature(℃) 25 | 50 | 80 | 100 |
|---|---|---|---|---|---|
| 王 水 Nitro-hydrochloric acid | | D | | | |
| 混酸：硫酸>50%+硝酸<50%+水<20% Mixed acid: sulphuric acid>50%+nitric acid<50%+water<20% | | B | B | B | |
| | | D(沸点) D(Boiling point) | | | |
| | | D | | | |
| 混酸：硫酸20～60%+硝酸<25%+水<20% Mixed acid: sulphuric acid>20～60%+nitric acid<25%+water<20% | | D | | | |
| 混酸：硫酸30%+硝酸15%+水55% Mixed acid: sulphuric acid 30%+nitric acid 15%+water55% | | B | B | B | |
| | | B(沸点) B(Boiling) (110) | | | |
| 混酸：硫酸15%+硝酸5%+水80% Mixed acid: sulphuric acid 15%+nitric acid 5%+water80% | | B | B | B | |
| | | B(沸点) B(Boiling) (110) | | | |
| 甲 酸∞③ Aminic acid | <5 | B | B | B | B |
| | >5 | C | C | C | C |
| | | D(沸点) D(Boiling point) | | | |
| 醋酸*③(不充气)(乙酸) Acetic acid* (without gas filled) (acetic acid) | <50 | A | A | A | A |
| | 60～90 | B | B | B | B |
| | 100 | B | B | B | B |
| | | D(200) | | | |
| 醋酸(充气) Acetic aicd (gas filled) | <40 | A | A | A | A |
| | | B(150) | | D(200) | |
| | 50 | A | B | B | B |
| | 60～90 | A | B | B | C |
| | 100 | A | B | B | C |
| | | D(150) | | | |
| 氢氧化钠 Sodium hydroxide | <20 | A | A | A | A |
| | | B(沸点) B(Boiling point) | | D(150) | |
| | 30～50 | A | A | B | D |
| | | D*(150) | | | |
| | 70 | A | A | B | B |
| | | D*(150) | | | |
| | 80 | A | A | B | D* |
| | | D(260) | | D(370) | |

| 介质名称 Medium name | 浓度 Concentration (%) | 温度 Temperature(℃) 25 | 50 | 80 | 100 |
|---|---|---|---|---|---|
| 氢氧化钠 Sodium hydroxide | 100 | A | A | A | A |
| | | C(260) | | D(370) | |
| 氢氧化钾* Potassium hydroxide* | <50 | A | A | A | A |
| | | A(沸点) A(Boiling point) | | | |
| | 50 | B | B | B | D |
| | | D(200) | | | |
| | 60～70 | B | B | B | C |
| | | C(150) | | | |
| | 80 | B | | | |
| | | D(200) | | | |
| | 100 | A | | | |
| | | D(260) | | | |
| 硫酸钠 Sodium sulphate | | A | A | A | A |
| | | A(200) | | B(840) | |
| 硝酸钠 Sodium nitrate | <70 | A | A | A | A |
| | | A(沸点) A(Boiling point) | | | |
| | 100 | B | | | |
| | | A(510) | | | |
| 碳酸钠 Sodium carbonate | 10 | A | A | A | A |
| | | A(沸点) A(Boiling point) | | | |
| | 20～40 | B | B | A | A |
| | | A(沸点) A(Boiling point) | | | |
| | 100 | B | B | B | B(260) |
| | | D*(400) | | D*(900) | |
| 氯化钠*∞ Sodium chloride*∞ | 10 | B | D | | |
| | 20～30 | B | B | B | B |
| | | B(沸点) B(Boiling point) | | D(120) | |
| | 90 | D | | | |
| | 100 | A | D(700) | | |
| 碳酸氢钠 Sodium bicarbonate | | A | A | A | A |
| 氰化钠∞ Sodium cyanide*∞ | <10 | A | A | A | A |
| | 20～30 | A | | | |
| | 40～100 | B | | | D |
| | | D(700) | | | |
| 硅酸钠 Potassium silicate | | A | A | A | A |
| | | D(800～100) | | | |
| 硫酸钠 Potassium sulphate | <100 | A | A | A | A |
| | | A(沸点) A(Boiling point) | | | |





| 介质名称 Medium name | 浓度 Concentration (%) | 温度 Temperature(℃) 25 | 50 | 80 | 100 |
|---|---|---|---|---|---|
| | 100 | A | | | |
| 硝酸钾 Potassium nitrate | <80 | B | B | B | B |
| | | B(沸点) B(Boiling point) | | | |
| | 100 | B | | | |
| | | B(550) | | | |
| 碳酸钾 Potassium bicarbonate | <70 | B | B | B | B |
| | | B(沸点) B(Boiling point) | | | |
| | 100 | B | B | B | B |
| 氟化钾 Potassium fluoride | | B | B | B | B |
| 氰化钾 Potassium cyanide | <90 | B | B | B | B |
| | 100 | B | | | |
| 重铬酸钾 Heavy potassium chromate | <30 | A | A | A | A |
| | | A(沸点) A(Boiling point) | | | |
| | 40～60 | | | | A |
| | 10 | B | | | |
| 高锰酸钾 Potassium permanganate | <30 | B | B | B | B |
| 氯化钙*∞ Calcium chloride*∞ | 10 | B | D | | |
| | 20～30 | B | B | | |
| | 40～90 | B | B | B | |
| | | D(沸点) D(Boiling point) | | | |
| | 100 | A | A | A | A |
| | 50 | C(-18) | | | |
| 氟化钙 Calcium fluoride | 10 | A | A | A | A |
| | 100 | A | A | A | A |
| 甲 醇 Methanol | <100 | A | A | A | A |

| 介质名称 Medium name | 浓度 Concentration (%) | 温度 Temperature(℃) 25 | 50 | 80 | 100 |
|---|---|---|---|---|---|
| | 100 | A | A | A | A |
| 乙 醇 Alcohol | | A | A | A | A |
| 乙二醇 Ethandiol | | A | A | A | A |
| 甲 醛∞ Formaldehyde∞ | <40 | A | A | A | A |
| | | A(150) | | | |
| | 50 | A | A | B | B |
| | | B(300) | | | |
| | 60～70 | A | A | | |
| | 80～90 | A | A | A | |
| | 100 | A | | | |
| 乙 醚 Ethyl ether | | A | A | A | A |
| 丙 酮 Acetone | | A | A | A | A |
| 醋酸乙脂 Ethyl ester acetate | | A | A | B | B |
| 甲 苯 Toluene | | A | A | A | A |
| | | A(沸点) A(Boiling point) | | | |
| 汽 油 Gasoline | | A | A | A | A |
| | | A(175) | | | |
| 煤 油 Coal oil | | A | A | A | A |
| | | A(200) | | | |
| 苯 酚 Phenyl hydroxide | 70～90 | B | B | B | B |
| | | B(150) | | D(200) | |
| 海 水 Sea water | 流 速 Flowrate | | | | |
| | <1.5m/s | A∞* | | A(PH≈7) | |
| | >1.5m/s | A∞* | | | |

注：① Cr26Mol铁素体钢不耐蚀；
② 高流速和摩擦会增加腐蚀；
③ 不许可含微量盐酸、硫酸或氯化钠。Cr26Mol铁素体钢耐蚀较好。

Note: ① Cr26Mol ferritic steel does not withstand corrosion;
② High flowrate and friction may increase corrosion;
③ Not allowed to contain micro chlorhydric acid, sulphuric acid or sodium chloride.Cr26MOl ferritic steel is of a better corrosion resistance.

## 钛及钛合金泵的适应介质表
## Table of the media suitable to the pump of titanium and titanium alloy

| 介质名称 Medium name | 浓度 Concentration (%) | 温度 Temperature(℃) 25 | 50 | 80 | 100 |
|---|---|---|---|---|---|
| 硫酸①(充气) Vitriol① (gas filled) | 1 | B | B | B | B |
| | | B(沸点) B(Boiling point) | | | |
| | <3 | B | B | | D |
| | <10 | B | C | D | D |
| | 10～30 | B | C | D | |
| | 40～50 | C | D | | |
| | 50～100 | D | D | | |
| 硫酸(不充气) Vitriol (without gas filled) | <10 | B | | | |
| | 10～100 | D | | | |

| 介质名称 Medium name | 浓度 Concentration (%) | 温度 Temperature(℃) 25 | 50 | 80 | 100 |
|---|---|---|---|---|---|
| 硝 酸 Nitric acid | 10 | A | A | A | A(150) |
| | | B(200) | | | |
| | 20 | A | A | A | |
| | | A(150) | | B(200) | |
| | | D(316) | | | |
| | 30～80 | A | A | A | A(150) |
| | | D(200) | | | |
| | 80～100 | A | A | B | |
| | | B(150) | | | |

| 介质名称 Medium name | 浓度 Concentr-ation (%) | 温度 Temperature(℃) 25 | 50 | 80 | 100 |
|---|---|---|---|---|---|
| 盐酸①(不充气) Chlorhydric acid① (without gas filled) | 10 | B | D | | |
| | 20 | C | D | | |
| | >30 | D | | | |
| 盐酸①(充气) Chlorhydric acid① (gas filled) | 1 | B | B | B | B(沸点) B(Boiling point) |
| | <20 | B | | | D(35) |
| | | | | | |
| | 30 | B | D | | |
| | >50 | D | | | |
| 磷酸(充气) Phosphoric acid (gas filled) | 5 | B | B | B | B |
| | <10 | B | B | B | |
| 磷酸(充气) Phosphoric acid (gas filled) | | D(沸点) D(Boiling point) | | | |
| | 10～20 | B | D | | |
| | 30 | B | C | | D |
| | 40 | C | C | | |
| | 50～70 | C | C | D | |
| | 100 | D | | | |
| 磷酸①(不充气) Phosphoric acid① (without gas filled) | | D | | | |
| 铬 酸 Chromic acid | 10 | A | A | A | A |
| | | A(沸点) A(Boiling point) | | | |
| | <90 | A | A | A | A |
| 硼 酸 Boratic acid | 10 | A | A | A | A |
| | | A(沸点) A(Bolling point) | | | |
| | <饱和 <Saturation | A | A | A | A |
| 盐酸1%+硝酸3% Chlorhydric acid 1%+nitric acid 3% | | A | | | |
| 盐酸2%+硝酸1% Chlorhydric acid 2%+nitric acid 1% | | A | | | |
| 王 水 Nitro-hdrochloric acid | | A | A | B | B |
| 盐酸4%+硝酸1% Chlorhydric acid 4%+nitric acid 1% | | A | | | |

| 介质名称 Medium name | 浓度 Concentr-ation (%) | 温度 Temperature(℃) 25 | 50 | 80 | 100 |
|---|---|---|---|---|---|
| 甲酸(不充气) Aminic acid (without gas filled) | <10 | A | A | A | |
| | | A(沸点) A(Boiling) | | | |
| | 30 | D | | | D |
| | <50 | B | B | D | D |
| | 90 | | | D | D |
| 甲酸(充气) Amini acid(gas filled) | | B | B | B | B |
| 醋 酸 Acetic acid | | A | A | A | A |
| | | A(200) | | | |
| 氢氧化钾 Potassium hydroxide | 10 | A | A | A | A |
| 氢氧化钾 Potassium hydroxide | | A(沸点) A(Boiling point) | | | |
| | 20～100 | B | | | D(沸点) D(Boiling point) |
| | | D(260) | | | |
| 氢氧化钠 Sodium hydroxide | 10 | A | A | A | A |
| | | A(沸点) A(Boiling point) | | | |
| 硫酸钠 Sodium sulphate | 10～30 | A | A | A | A |
| | | A(沸点) A(Boiling point) | | | |
| | 饱和 Saturation | A | A | | |
| | | D(900) | | | |
| 硝酸钠 Sodium nitrate | <饱和 <Saturation | A | A | A | A |
| | | A(300) | | | |
| 氯化钠 Sodium chloride | <饱和 <Saturation | A | A | A | A |
| | | A(沸点) A(Boiling point) | | | |
| | 100 | A*(沸点) A*(Boiling point) | | | |
| 乙醇*②Alcohol* | | A | A | A | A |
| 乙二醇 Ethandiol | | A | A | A | A |
| 乙 醚 Ethyl ether | | A | A | A | A |
| 丙 酮 Acetone | | A | A | A | A |
| 醋酸乙脂 Ethyl ester acetate | | A | A | A | A |
| 甲 苯 Toluene | | A | A | A | A |
| 苯 酚 Phenyl hydroxide | | A | | | |

注：①含Cu、Ni等离子或其他氧化剂能降低腐蚀。
②含微量Cl⁻的甲、乙醇可能产生应力腐蚀破裂，含2%以上的水时可避免。

Note：①Containing Cu, Ni etc.ions or other oxidants can lower the corrosion.
②Both methanol and alcohol containing micro $cl^-$ may produce stress corrosive craking,which can be avoided by containing more than 2% water.





## ZGOOCr20Ni25Mo4.5Cu1.5(904L)耐腐蚀性能表
## ZGOOCr20Ni25MO4.5CU1.5(904L)Table of anti-corrosive performance

| 介质名称 Medium name | 介质条件 Medium condition 浓度 Concentration(%) | 温度 Temperature(℃) | 腐蚀情况 Corrosion condition |
|---|---|---|---|
| 硫 酸 Vitriol | 5-40 | 60 | A |
| | 10 | 80 | B |
| | 20 | 70 | B |
| | 30 | 70 | B |
| | 40 | 30-50 | A |
| | 50 | 40 | A |
| | 50 | 50 | B |
| | 60 | 20-35 | A |
| | 60 | 40 | B |
| | 80-98 | 40 | A |
| | 80-98 | 50 | B |

| 介质名称 Medium name | 介质条件 Medium condition 浓度 Concentration(%) | 温度 Temperature(℃) | 腐蚀情况 Corrosion condition |
|---|---|---|---|
| 硝 酸 Nitric acid | 10-40 | 20-沸腾 20-Boiling | A |
| | 50 | 100 | A |
| | 60 | 90 | A |
| | 70 | 100 | B |
| | 80 | 80 | B |
| 醋 酸 Acetic acid | 1-80 | 沸腾 Boiling | A |
| | 99.5 | 200 | A |
| | 100 | 20-75 | A |
| | 100 | 100 | A |
| | 100 | 沸腾 Boiling | A |

## ZG1Cr13(410)耐腐蚀性能表
## ZG1Cr13(410) Table of anti-corrosive performance

| 介质条件 Medium condition 介质名称 Medium name | 浓度 Concentration(%) | 温度 Temperature(℃) | 延续时间 Extended time h | 腐蚀情况 Corrosion condition |
|---|---|---|---|---|
| 硝 酸 Nitric acid | 5 | 20 | | A |
| | 7 | 20 | 720 | A |
| | 5 | 沸腾 Boiling | | D |
| | 20 | 20 | | A |
| | 20 | 沸腾 Boiling | | A |
| | 50 | 20 | | A |
| | 50 | 沸腾 Boiling | 24 | C |
| | 65 | 20 | | A |
| | 65 | 沸腾 Boiling | 24 | D |
| | 90 | 20 | | A |
| | 90 | 沸腾 Boiling | | D |
| 醋 酸 Acetic acid | 10-50 | 20 | | C |
| | 10 | 沸腾 Boiling | | D |
| 蚁 酸 Formic acid | 10-50 | 20 | | A |
| | 10-50 | 沸腾 Boiling | | D |
| 柠檬酸 Citric acid | 1 | 20 | | A |
| | 1 | 沸腾 Boiling | | D |
| | 25 | 20 | 720 | C |
| 氨 Ammonia | 溶液或气体 Solution or air | 20-100 | | A |
| 氢氧化钠 Sodium hydroxide | 20 | 20 | | A |
| | 20 | 沸腾 Boiling | | A |
| | 50 | 100 | | D |
| | 浓 液 Thick liquid | 20 | | A |

| 介质条件 Medium condition 介质名称 Medium name | 浓度 Concentration(%) | 温度 Temperature(℃) | 延续时间 Extended time h | 腐蚀情况 Corrosion condition |
|---|---|---|---|---|
| 草 酸 Oxalic acid | 浓 液 Thick liquid | 20 | | A |
| | 浓 液 Thick liquid | 沸腾 Boiling | | D |
| 硝酸铵 Ammonium nitrate | 约65 About 65 | 20 | 1127 | A |
| | 约65 About 65 | 125 | 110 | C |