连成集团
LIANCHENG GROUP

国家产品质量免检 | 中国著名品牌

SLQS 系列单级双吸中开蜗壳式强自吸离心泵

SLQS SERIES SINGLE-STAGE DOUBLE-SUCTION SPLIT VOLUTE CASING CENTRIFUGAL PUMP

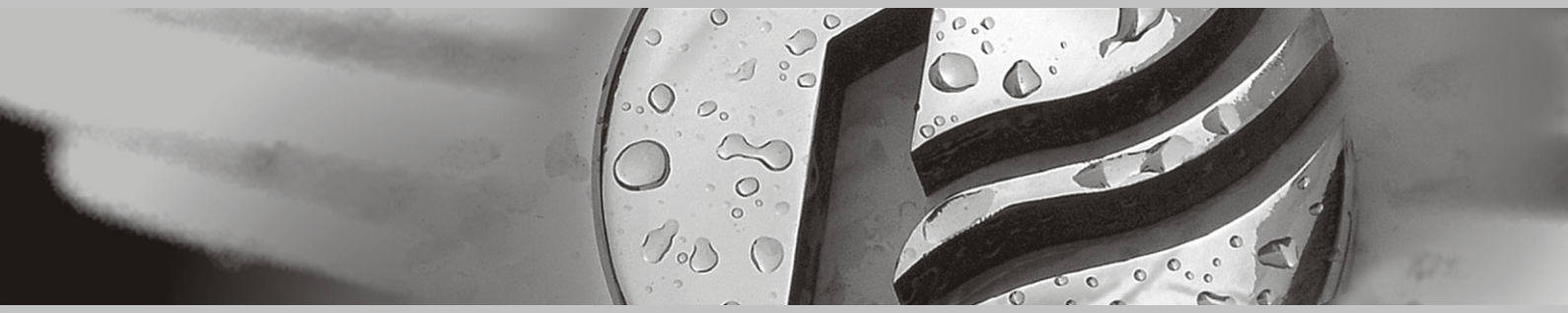

Product Catalog 2006

目 录 CONTENTS

产品概述 …… 01
Outline of the product

SLQS系列泵的运行数据 …… 01
Data of running

结构特点 …… 02
Characteristic of structure

工作原理图 …… 02
Working schematic diagram

型号意义 …… 03
Model meaning

主要零件材料表 …… 03
List of main parts’ materials

SLQS型卧式泵结构图 …… 04
Structural drawing of model slqs horizontal pump

SLQS型泵型谱图 …… 07
SLQS type pump atlas of style

SLQS型泵性能参数 …… 08
SLQS type pump performance

SLQS型泵性能曲线图 …… 26
SLQS type pump performance curve chart

SLQS型卧式泵安装形式 …… 49
SLQS type horizontal pump installation model

转向/流向 …… 50
Rotating direcdtion/flowing direction

SLQS型连接法兰尺寸 …… 51
SLQS type conjunction flange dimension

SLQS型泵安装尺寸 …… 53
SLQS type pump installation dimension

主要外形尺寸 …… 53
external dimension

电机尺寸—Y型电机 …… 53
motor dimension-y type motor

泵的安装 …… 66
Installation

泵的启动、运转和停机 …… 66
Starting and stopping

泵的维修与保养 …… 67
Maintenance

故障原因及排除方法 …… 68
Failures causes and troubleshooting

产品概述 OUTLINE OF PRODUCT

SLQS系列单级双吸中开蜗壳式强自吸离心泵，是我公司自行研制的专利产品，旨在帮助用户解决在管路安装工程中出现的难题。它是在原有双吸泵基础上，加装自吸装置，来达到泵自动排气吸水的能力。现有的离心泵机组在使用时，要想使泵能吸水并开始工作，就要求使用方必须做到下列三种工作之一：一是必须在进口管路吸水池处加装底阀，泵在启动前，将底阀关闭，泵内灌满水，空气排干净才可以启动，由于底阀装在液面下，若发生故障，检修很不方便。而且，对于大流量机组，需大量灌水，使用起来极不方便。二是另外配备真空泵，将水从吸水池引到泵内，根据泵机组规格大小不同，要配备不同规格的真空泵，一台真空泵的造价也较高，这就增加了工程造价。三是将泵机组的安装位置置于吸入液面下，即倒灌安装，这就意味着泵房基础位置要低于地面，即在地下挖坑，这大大增加了工程造价。当用户不想通过使用上述三种方法而使泵能正常上水工作时，我公司生产的强自吸双吸离心泵可满足您的心愿！

该系列泵的使用范围及领域与普通双吸泵相同，适用于自来水厂、空调循环用水、建筑供水、灌溉、排水泵站、电站、工业供水系统、船舶工业等输送清水或物理化学性质类似于清水的液体。

该系列泵已获国家7项专利。

⚠ 注意：若采用机械密封结构，需外接冲洗水！

SLQS series single stage dual suction split casing powerful self suction centrifugal pump is a patent product developed in this Co.for helping users to settle the difficult problem in the installation of pipeline engineering and equipped with a self suction device on the basis of the original dual suction pump to make the pump to have the exhaust and water-suction capacity. AS of the existing centrifugal pump unit, the user has to do one of the three jobs below when to get the pump suck and start working: 1.mount a foot valve on the water suction pool of the inlet pipeline and close it before starting the pump, then open it when the pump is full of water inside and the air inside is completely exhausted. Under-liquid installation of the foot valve makes overhaul very unconvenient in case of a failure. 2.equip the pump unit with a vacuum pump to lead the water in the suction pool into the pump. Different norms of the pump unit need different norms of the vacuum pump, requiring a cost not low and thus increasing the engineering cost. 3.mount the pump unit under the sucked in liquid surface, i.e. Inverse pumping, that means the basis of the pump room must be below the ground, i.e. digging hole underground, this makes the engineering cost greatly increased. While the powerful self-suction centrifugal pump can make it satisfied for a user to have the pump normally pumping without use of any of the three ways above-mentioned!

Similar to the common dual suction pump, this series pump is also suitable for a water works, air-conditioning water circulating system, water supply of buildings, irrigation, water draining pump station, electric station, industrial water supply system, Shipping industry etc. To transport pure water or the Liquid of both physical and chemical natures similar to Pure water.

The series pump have attained 7 kind of patents.

⚠ Notice：if it is with mechanical seal devices,the external washing water should be adopted.

SLQS系列泵的运行数据 DATA OF RUNNING

泵出口直径	DN	80～800mm
流　　量	Q	≤ 11600m³/h
扬　　程	H	≤ 200m
工作温度	T	≤ 105℃ (常规)
固体颗粒		≤ 80mg/L
工作许用压力		≤ 18bar
许用试验压力		≤ 27bar

Outlet diameter of pump	DN	80～800mm
Capacity	Q	≤ 11600m³/h
Head	H	≤ 200m
Working temperature	T	≤ 105℃
Solid grains		≤ 80mg/L
Permitted working pressure		≤ 18bar
Permitted testing pressure		≤ 27bar

结构特点 CHARACTERISTIC OF STRUCTURE

1、可实现机组的完全自动化控制。
2、自吸装置与泵共用一根轴，不增加轴功率。
3、泵进口依靠自吸装置一直处于真空状态， 可随时抽气。
4、若进口管路出现断水现象，或需经常启动泵时，可自动排气、吸水。
5、根据进口管路及泵的尺寸大小即空气量的多少，可设置单空气室和双空气室两种结构。
6、不改变原双吸泵的结构 。泵的工作原理见工作原理图。

1.Can control the pump unit automatically.
2.Both pump and self suction device use one shaft, no shaft power is increased.
3.Upon the self suction device, the pump' s inlet is in a Vacuum status all the time and can extract air at any time.
4.Automatic exhaust and water suction is available in case of water cut-off in the inlet pipeline or requiring to start the pump often.
5.Two structures of single and double air rooms can be set up upon the size of the inlet pipeline and the pump, that means the quantity of air.
6.Not to change the construction of dual-suction pump. The working principle of the pump refer to working principle drawing.

工作原理图 WORKING SCHEMATIC DIAGRAM

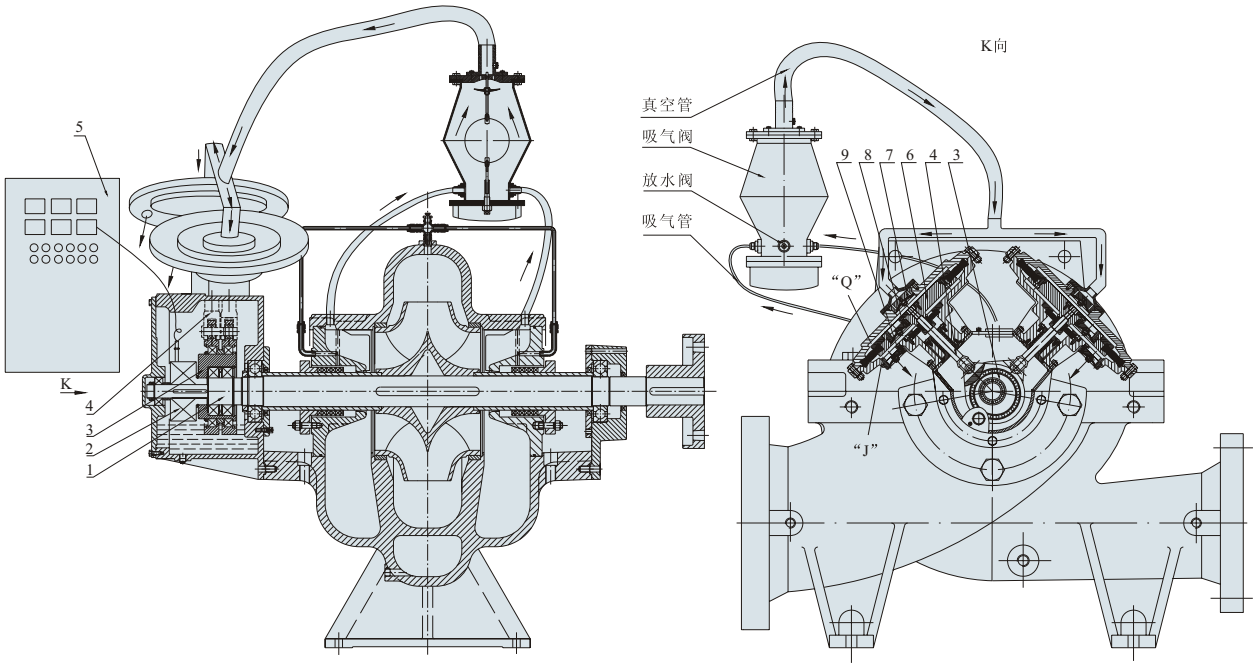

电机带动泵轴1旋转，同时离合器2收到控制系统5传来的开始工作信号，自动与偏心轮3啮合并随泵轴共同旋转，偏心轮旋转时将由于偏心距产生的位移传给连杆4，连杆4就带动活塞6进行往复运动，活塞做往复运动时，使得“Q”腔及“J”腔的体积产生有规律的增减，从而将气体不断的从泵及管路内吸出并经单向排气阀7、8、9排出。气体排出路径见图中所示。

型号意义 MODEL MEANING

SL QS 150 - 350 (I) A

- A — 经第一次切割叶轮 Impeller via first cutting
- (I) — (I)为扩流型 (I) as flow-expanded type
- 350 — 叶轮名义直径为350mm Nominal diameter of impeller 350mm
- 150 — 泵出口直径为150mm Outlet diameter of pump 150mm
- QS — 强自吸蜗壳式双吸离心泵 Spiral casing vertical centrifugal pump
- SL — 上海“连成”牌 Shanghai Liancheng brand

主要零件材料表 LIST OF MAIN PARTS’ MATERIALS

零件名称 Part	材料名称 Material	GB
泵壳 Pump casing	灰铸铁 Casting pig 球墨铸铁 Ductalloy	HT250 QT400-18
叶轮 Impeller	青铜 Bronze 灰铸铁 Casting pig 硅黄铜 Silicon brass 不锈钢 Stainless steel	ZCuSn10Pb1 HT250 ZCuZn16Si4 ZG1Cr18Ni9Ti
轴 Shaft	不锈钢 Stainless steel 碳钢 Carbon steel	2Cr13 40Cr
泵体密封环 Seal-ring on pump casing	青铜 Bronze 灰铸铁 Casting pig 硅黄铜 Silicon brass 不锈钢 Stainless steel	ZCuSn10Pb1 HT250 ZCuZn16Si4 ZG1Cr18Ni9Ti

SLQS型卧式泵结构图 STRUCTURAL DRAWING OF MODEL SLQS HORIZONTAL PUMP

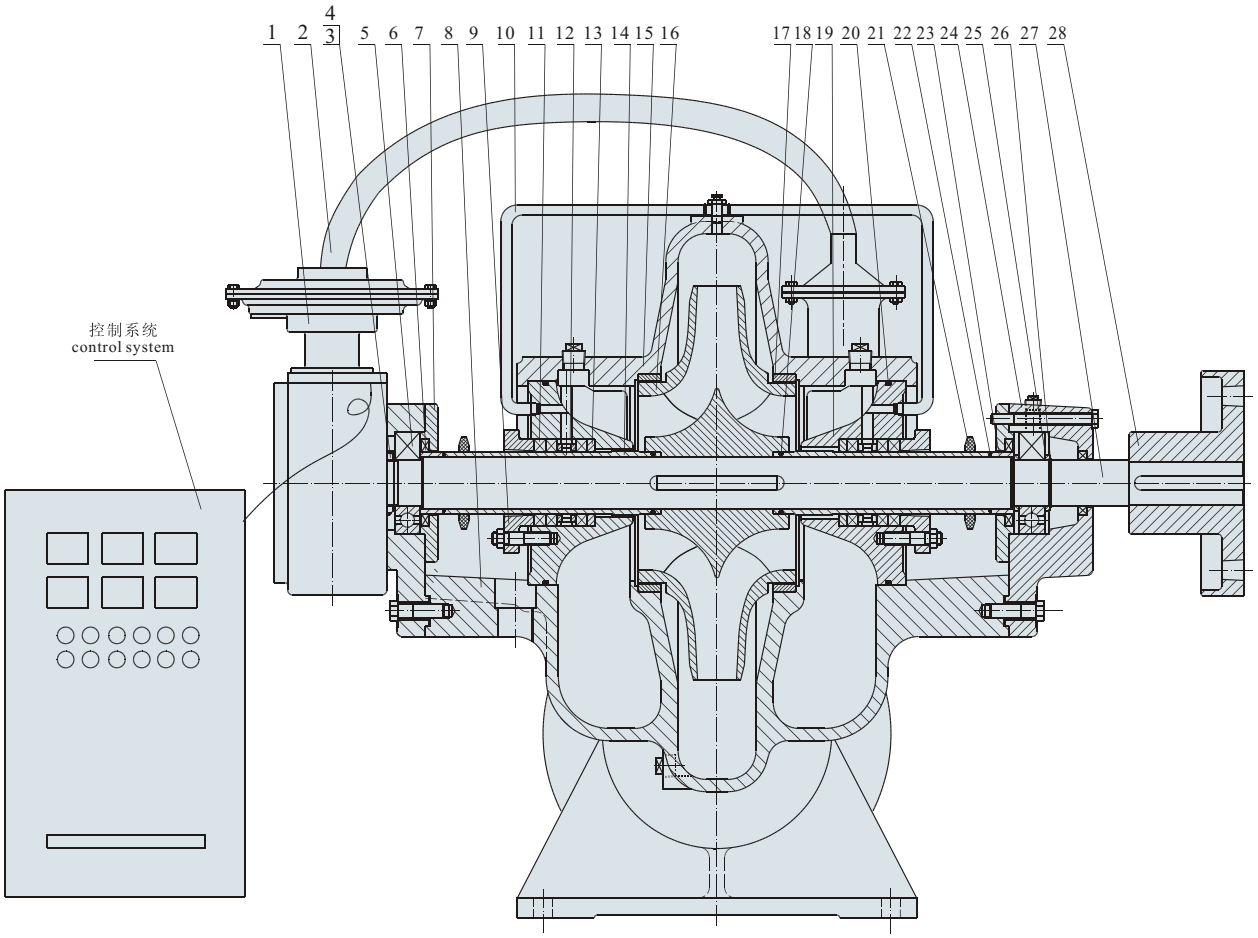

结构图1 Structural diagram 1

(适合80～350口径，单空气室结构) Suitable for single air room structure of an aperture 80～350

1	强自吸装置 Powerful self suction device	6	骨架油封 Oil seal of frame	11	填料 Packing	16	叶轮 Impeller	21	挡水圈 Water retaining ring	26	弹性挡圈 Elastic baffle
2	吸气管 Suction hose	7	轴承压盖 Bearing gland	12	填料环 Packing ring	17	密封环 Seal ring	22	O型圈 O-ring	27	轴 Shaft
3	圆螺母 Round nut	8	泵体 Pump casing	13	填料挡套 Backing sleeve of packing	18	O型圈 O-ring	23	短轴套 Short muff	28	泵联 Pump linkage
4	止退垫圈 Thrust washer	9	填料压盖 Packing gland	14	填料轴套 Packing muff	19	密封体 Sealing body	24	轴承体甲 Bearing body A		
5	轴承 Bearing	10	冲洗水管 Rinsing water pipe	15	泵盖 Pump cover	20	O型圈 O-ring	25	轴承挡圈 Bearing baffle		

SLQS型卧式泵结构图 STRUCTURAL DRAWING OF MODEL SLQS HORIZONTAL PUMP

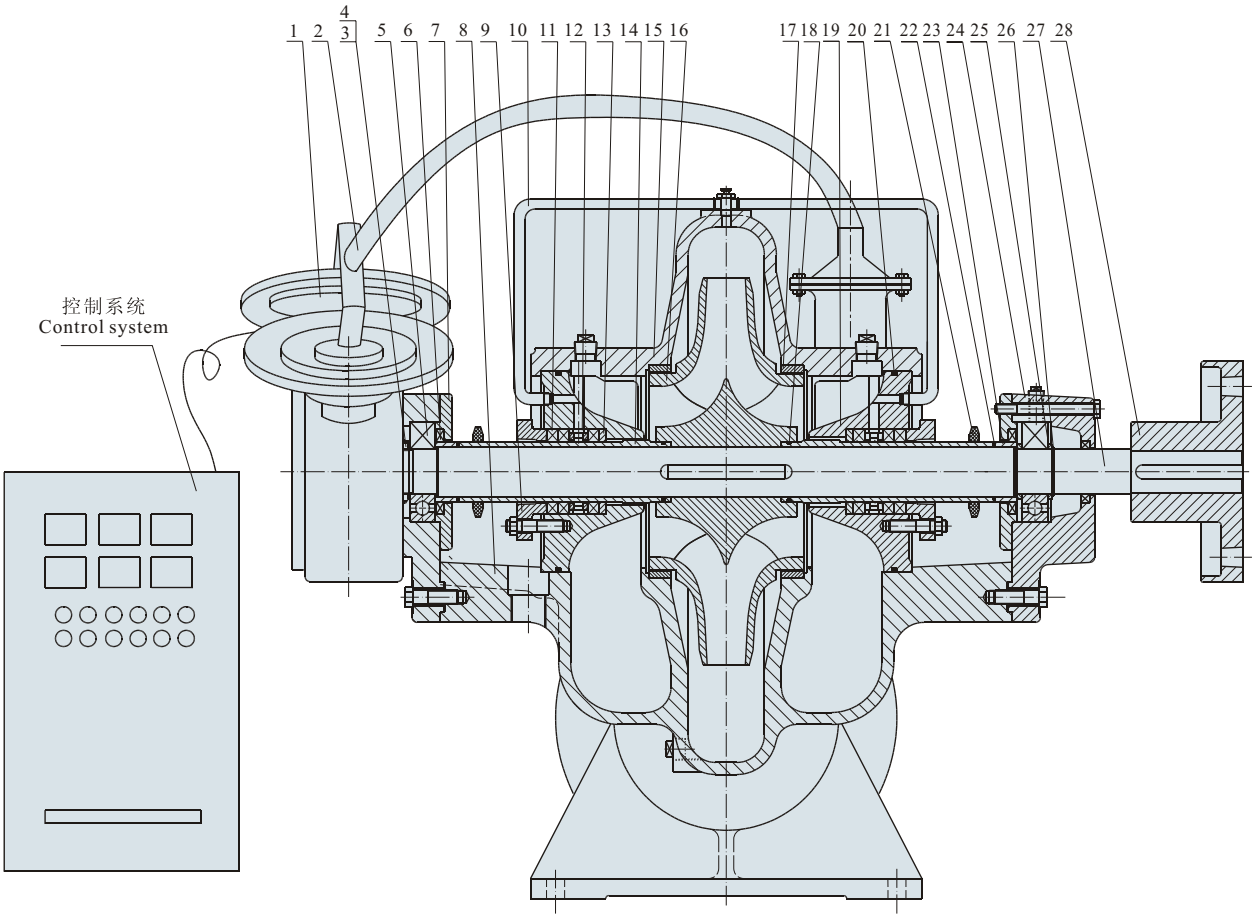

结构图2 Structural diagram 2

(适合80～350口径，双空气室结构) Suitable for double air room structure of an aperture 80～350

1	强自吸装置 Powerful self suction device	6	骨架油封 Oil seal of frame	11	填料 Packing	16	叶轮 Impeller	21	挡水圈 Water retaining ring	26	弹性挡圈 Elastic baffle
2	吸气管 Suction hose	7	轴承压盖 Bearing gland	12	填料环 Packing ring	17	密封环 Seal ring	22	O型圈 O-ring	27	轴 Shaft
3	圆螺母 Round nut	8	泵体 Pump casing	13	填料挡套 Backing sleeve of packing	18	O型圈 O-ring	23	短轴套 Short muff	28	泵联 Pump linkage
4	止退垫圈 Thrust washer	9	填料压盖 Packing gland	14	填料轴套 Packing muff	19	密封体 Sealing body	24	轴承体甲 Bearing body A		
5	轴承 Bearing	10	冲洗水管 Rinsing water pipe	15	泵盖 Pump cover	20	O型圈 O-ring	25	轴承挡圈 Bearing baffle		

SLQS型卧式泵结构图 STRUCTURAL DRAWING OF MODEL SLQS HORIZONTAL PUMP

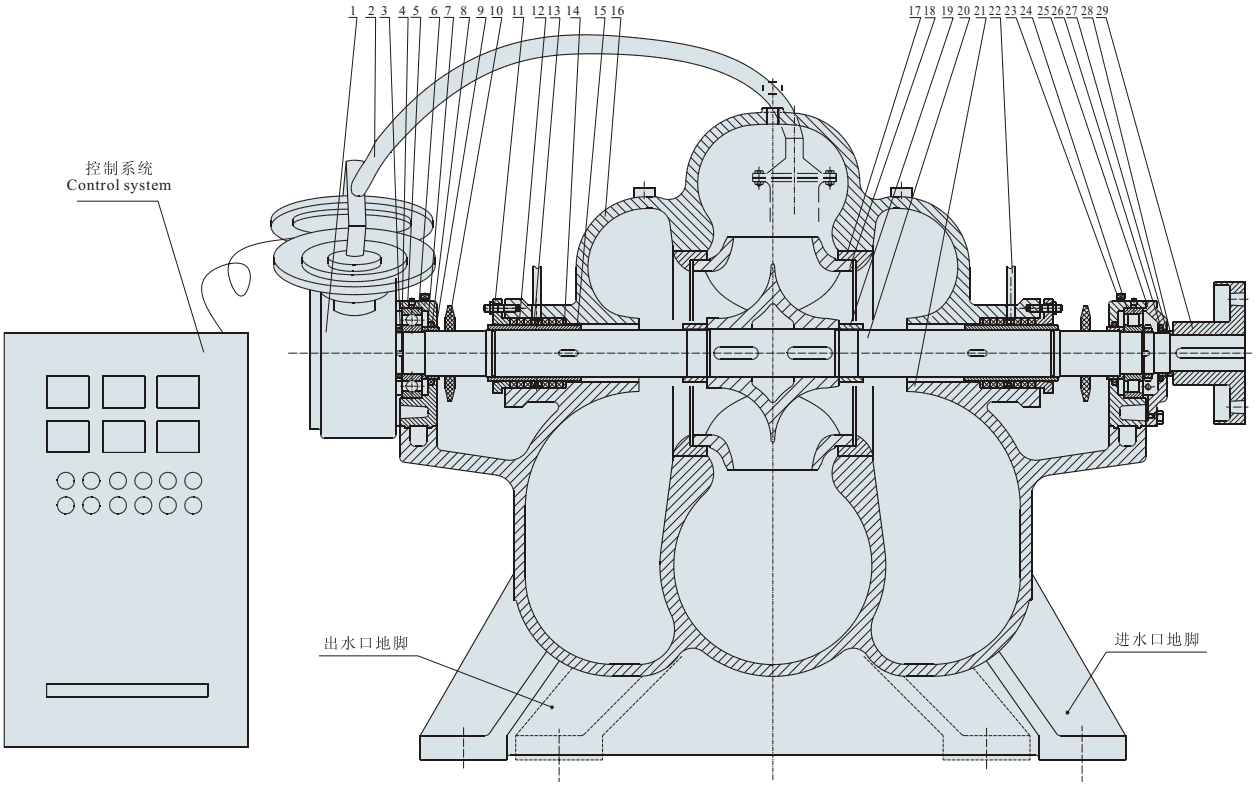

结构图3 Structural diagram 3

(适合400～800口径，双空气室结构) Suitable for double air room structure of an aperture 400～800

1	强自吸装置 Powerful self suction device	6	径向轴承 Oil seal of frame	11	填料压盖 Packing gland	16	泵盖 Pump cover	21	泵体 pump body	26	骨架油封 oil-seal of frame
2	吸气软管 Suction soft hose	7	O型圈 O-ring	12	填料 Packing	17	密封环 Seal ring	22	冲洗水管 washing water pipe	27	O型圈 O-ring
3	圆螺母 Round nut	8	骨架油封 oil-seal of frame	13	填料环 packing ring	18	叶轮 Impeller	23	油杯 oil cup	28	轴承挡套乙 backing sleeve of bearing A
4	止退垫圈 Thrust washer	9	轴承挡套乙 backing sleeve of bearing B	14	填料挡套 Backing sleeve of packing	19	叶轮螺母 Impeller nut	24	滚子轴承 rouing bearing	29	泵联 Pump linkage
5	轴承体 Bearing body	10	挡水圈 water retaining ring	15	填料轴套 Packing muff	20	轴 Shaft	25	轴承压盖甲 Bearing body A		

SLQS型泵型谱图 SLQS TYPE PUMP ATLAS OF STYLE

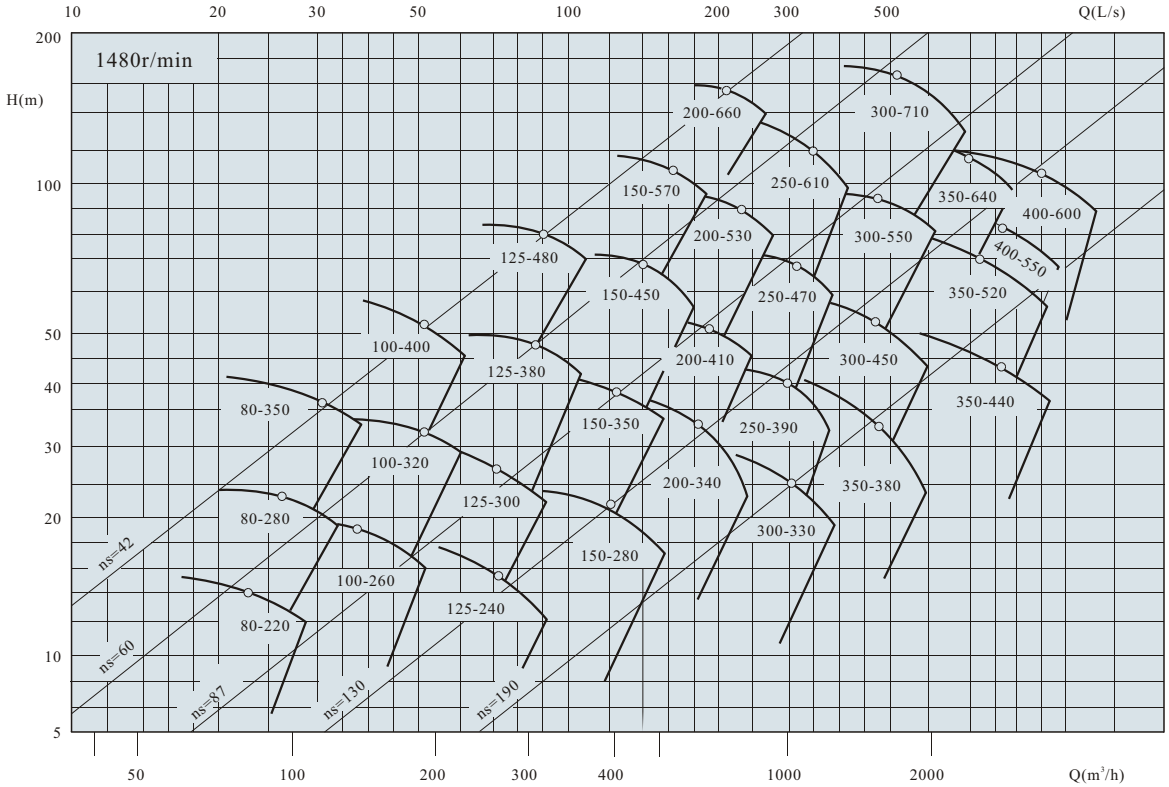

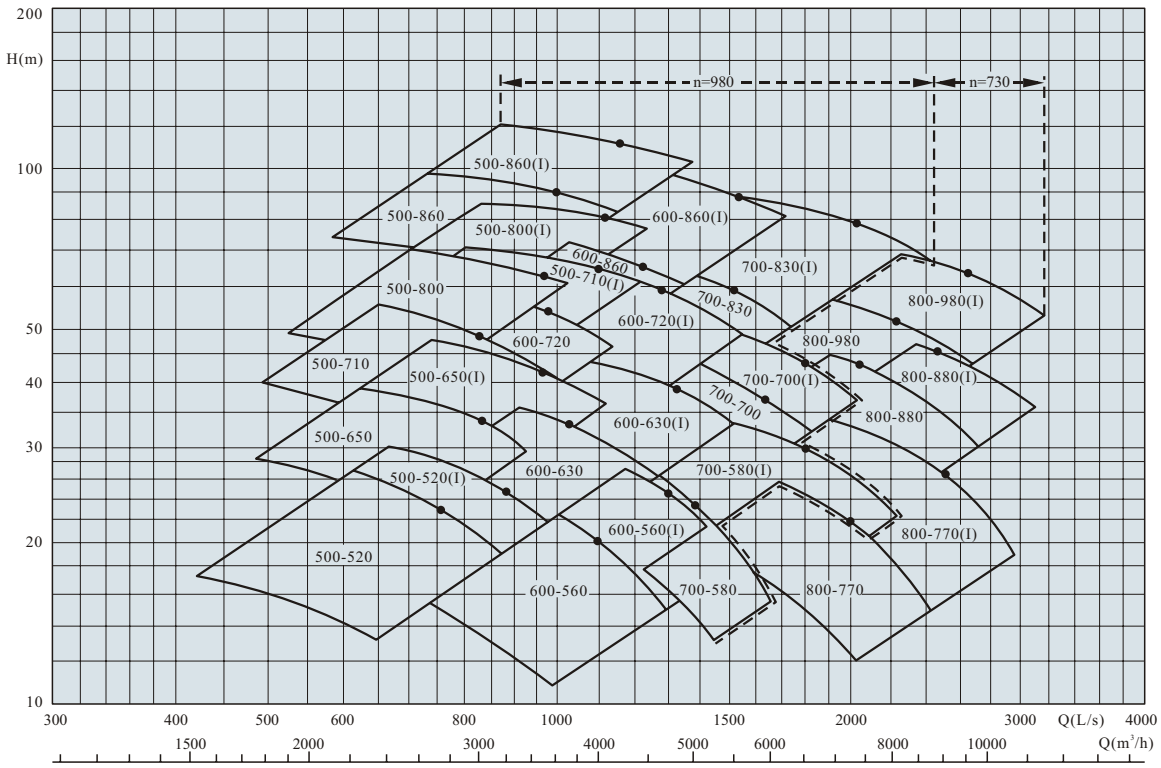

SLQS型泵性能参数 SLQS TYPE PUMP PERFORMANCE

序号 No.	泵型号 Pump type		流量 Capacity (m^3/h)	流量 Capacity (L/s)	扬程 Head (m)	转速 Speed (r/min)	电机功率 Motor power (kW)	效率 Eff. (%)	必需汽蚀余量 (NPSH)r (m)	排气量 (m^3/min)	泵净重 Weight (kg)
1	80-220(I)		22.0 83.5 121.0	6.1 23.2 33.6	17.0 13.8 10.0	1480	5.5	82	1.6	1.57	175
2		A	20.0 77.2 108.0	5.6 21.4 30.0	14.8 11.8 8.7		4	81			
3		B	17.5 70.4 96.0	4.86 19.6 26.6	12.4 9.8 7.7		3	80.5			
4		C	16.0 64.4 83.0	4.4 17.9 23.0	10.6 8.2 6.8		3	78			
5	80-220		17.0 66.5 108.0	4.7 18.5 30.0	16.0 12.8 7.8	1480	4	81	1.7	1.57	175
6		A	16.0 61.1 98.0	4.4 17.0 27.2	13.9 10.8 7.0		3	80			
7		B	15.0 55.8 85.0	4.2 15.5 23.6	11.8 9.0 6.2		3	78			
8		C	14.5 51.3 72.0	4.0 14.3 20.0	10.0 7.6 6.1		2.2	74			
9	80-280(I)		26.0 104.5 138.0	7.2 29.0 38.3	24.5 22.5 18.0	1480	11	78.5	2.3	1.57	194
10		A	25.0 96 129.0	6.9 26.7 35.8	22.0 19.0 16.0		11	78			
11		B	22.0 88.1 116.0	6.1 24.5 32.2	19.5 16.0 13.0		7.5	76			
12		C	21.0 79.4 105.0	5.8 22.0 29.0	16.8 13.0 10.5		5.5	75			
13	80-280		22.0 86.0 112.0	6.1 23.9 31.1	25.9 20.7 16.5	1480	7.5	77	1.9	1.57	194
14		A	21.0 80.4 102.0	5.8 22.3 28.3	21.8 18.1 14.3		7.5	76			
15		B	19.5 73.2 92.0	5.4 20.3 25.5	18.7 15.0 12.0		5.5	75			
16		C	18.0 66.8 82.0	5.0 18.6 22.8	15.8 12.5 10.5		4	74			
17	80-350(I)		29.0 114.4 150.0	8.1 31.8 41.7	43.5 38.8 29.3	1480	22	71.5	2.3	1.57	204
18		A	26.0 105.5 133.0	7.2 29.3 36.9	37.5 33.0 25.0		15	70.5			
19		B	22.0 96.3 117.0	6.1 26.8 32.5	32.0 27.5 22.0		15	70			
20		C	20.0 87.1 102.0	5.6 24.2 28.3	26.0 22.5 17.9		11	67.5			
21	80-350		26.0 100.0 132.0	7.2 27.8 36.7	43.0 35.5 27.9	1480	15	73	2.5	1.57	204

SLQS型泵性能参数 SLQS TYPE PUMP PERFORMANCE

序号 No.	泵型号 Pump type		流量 Capacity (m³/h)	流量 Capacity (L/s)	扬程 Head (m)	转速 Speed (r/min)	电机功率 Motor power (kW)	效率 Eff. (%)	必需汽蚀余量 (NPSH)r (m)	排气量 (m³/min)	泵净重 Weight (kg)
22	80-350	A	22.0 93.1 120.0	6.1 25.9 33.3	37.0 30.8 23.0	1480	15	70	2.5	1.57	204
23		B	20.0 82.8 98.0	5.6 23.0 27.2	31.0 25.5 22.8		11	66			
24		C	18.0 70.0 71.0	5.0 19.4 19.7	24.0 20.0 19.0		7.5	64			
25	100-260(I)		38.0 145.0 212.0	10.6 40.3 58.9	23.5 18.8 13.1	1480	11	82.5	2.4	1.57	207
26		A	37.0 132.9 192.0	10.3 36.9 53.0	20.1 15.8 11.5		11	81			
27		B	36.0 122.9 173.0	10.0 34.1 48.1	17.0 13.5 10.2		7.5	79			
28		C	34.0 115.9 154.0	9.4 32.2 42.8	14.5 11.0 8.9		5.5	77.5			
29	100-260		30.0 123.5 170.0	8.3 34.3 47.2	21.7 17.0 12.5	1480	11	81.5	1.9	1.57	207
30		A	28.0 114.0 154.0	7.8 31.7 42.8	19.0 14.5 11.3		7.5	79.5			
31		B	26.0 105.9 143.0	7.2 29.4 39.7	16.3 12.5 9.2		7.5	78			
32		C	25.0 99.3 131.0	6.9 27.6 36.4	13.3 11.0 7.9		5.5	76			
33	100-320(I)		47.0 185.5 225.0	13.1 51.5 62.5	38.1 31.2 26.0	1480	22	80	2.6	1.57	305
34		A	42.0 172.6 204.0	11.7 47.9 56.7	33.2 27.0 22.5		18.5	79.6			
35		B	38.0 157.5 184.0	10.6 43.8 51.1	27.9 22.5 18.5		15	79.3			
36		C	37.0 142.8 165.0	10.3 39.7 45.8	23.2 18.5 16.0		11	79			
37	100-320		50.0 141.5 174.0	13.9 39.3 48.3	36.0 29.5 25.5	1480	18.5	78	2.2	1.57	305
38		A	48.0 131.6 164.0	13.3 36.6 45.6	31.0 25.5 21.6		15	77.6			
39		B	47.0 120.0 152.0	13.1 33.3 42.2	26.0 21.2 17.9		11	77.3			
40		C	44.0 112.4 143.0	12.2 31.2 39.7	21.5 17.0 14.1		11	77			
41	100-400(I)		70.0 185.5 241.5	19.4 51.5 67.0	63.0 52.0 39.0	1480	45	73	2.5	1.57	325

SLQS型泵性能参数 SLQS TYPE PUMP PERFORMANCE

序号 No.	泵型号 Pump type		流量 Capacity (m^3/h)	流量 Capacity (L/s)	扬程 Head (m)	转速 Speed (r/min)	电机功率 Motor power (kW)	效率 Eff. (%)	必需汽蚀余量 (NPSH)r (m)	排气量 (m^3/min)	泵净重 Weight (kg)
42	100-400(I)	A	65.0 170.6 213.0	18.1 47.4 59.2	53.0 44.0 34.0	1480	30	72	2.5	1.57	325
43		B	62.0 158.6 190.0	17.2 44.0 52.8	46.0 38.0 31.2		30	71			
44		C	58.0 141.6 178.0	16.1 39.3 49.4	35.5 30.3 22.5		18.5	69			
45	100-400		60.0 163.0 217.0	16.7 45.3 60.3	60.9 52.0 41.1	1480	37	72	3.1	1.57	325
4		A	58.0 149.9 188.0	16.1 41.6 52.2	50.2 44.0 35.0		30	69			
47		B	54.0 138.4 168.0	15.0 38.5 46.7	42.9 37.5 31.0		22	66.5			
48		C	51.0 121.1 135.0	14.2 33.6 37.5	33.5 28.7 25.8		18.5	63			
49	125-240(I)		100.0 274.6 370.0	27.8 76.3 102.8	20.2 14.8 9.1	1480	18.5	85.5	1.8	1.57	390
50		A	92.0 259.3 332.0	25.6 72.0 92.2	18.3 13.2 8.3		15	84.5			
51		B	82.0 232.4 285.0	22.8 64.5 79.2	15.9 10.6 7.6		15	82.5			
52		C	78.0 210.5 240.0	21.7 58.5 66.7	13.2 8.7 6.8		11	77.5			
53	125-240		100.0 256.5 320.1	27.8 71.2 88.9	20.2 15.1 10.8	1480	15	84.5	2.2	1.57	390
54		A	94.0 242.5 300.4	26.1 67.4 83.4	17.6 13.5 9.1		15	84			
55		B	90.0 223.8 265.0	25.0 62.2 73.6	15.0 11.5 8.4		11	82			
56		C	82.0 199.1 220.0	22.8 55.3 61.1	12.4 9.1 7.8		7.5	78			
57	125-300(I)		100.0 270.0 375.0	27.8 75.0 104.2	32.5 27.0 21.0	1480	30	84	1.9	1.57	410
58		A	80.3 243.7 348.0	22.3 67.7 96.7	27.5 22.0 15.5		22	82			
59		B	75.0 220.5 310.0	20.8 61.2 86.1	23.5 18.0 12.5		18.5	80			
60		C	60.5 195.8 270.0	16.8 54.4 75.0	19.0 14.2 10.5		15	78			
61	125-300		100.0 242.5 370.0	27.8 67.4 102.8	32.0 25.0 17.1	1480	30	83	1.9	1.57	410
62		A	90.3 222.3 290.0	25.1 61.8 80.6	26.3 21.0 15.0		18.5	82			

SLQS型泵性能参数 SLQS TYPE PUMP PERFORMANCE

序号 No.	泵型号 Pump type		流量 Capacity (m^3/h)	流量 Capacity (L/s)	扬程 Head (m)	转速 Speed (r/min)	电机功率 Motor power (kW)	效率 Eff. (%)	必需汽蚀余量 (NPSH)r (m)	排气量 (m^3/min)	泵净重 Weight (kg)
63	125-300	B	80.0 202.9 250.0	22.2 56.4 69.4	22.1 17.5 13.2	1480	15	79	1.9	1.57	410
64		C	70.1 179.5 210.0	19.5 49.9 58.3	17.3 13.7 11.9		11	76			
65	125-380(I)		125.0 310.5 435.0	34.7 86.3 120.8	53.1 47.0 37.5	1480	75	80	2.1	1.57	420
66		A	104.0 282.8 395.0	28.9 78.6 109.7	45.0 39.0 31.8		45	79			
67		B	93.0 254.2 350.0	25.8 70.6 97.2	36.9 31.5 25.0		37	78			
68		C	85.5 221.9 295.2	23.7 61.6 109.8	27.9 24.0 18.8		30	76			
69	125-380		100.2 278.0 396.5	27.8 77.2 110.0	50.2 43.0 33.1	1480	55	79	2.4	1.57	420
70		A	92.1 257.9 349.6	25.8 71.6 97.1	42.9 37.0 28.4		45	78			
71		B	84.0 234.1 300.0	23.3 65.0 83.3	35.9 30.5 24.1		30	77			
72		C	79.1 209.8 250.5	22.0 58.3 69.6	28.9 24.5 20.0		22	76			
73	125-480(I)		109.2 328.5 380.4	30.3 91.3 105.7	86.0 76.0 71.0	1480	110	80	2.3	1.57	530
74		A	100.0 307.3 350.9	27.8 85.4 97.4	74.9 66.5 55.0		90	78.5			
75		B	80.4 282.0 300.4	22.3 78.3 83.4	64.7 56.0 51.3		75	77			
76		C	60.0 250.4 270.4	16.6 69.6 75.1	54.6 44.2 40.8		45	76			
77	125-480		100.0 294.5 370.0	27.8 81.8 102.8	81.2 69.5 61.5	1480	90	79	2.7	1.57	530
78		A	90.1 274.8 320.2	25.0 76.3 88.9	70.0 60.5 55.1		75	78			
79		B	85.3 257.2 284.5	23.7 71.4 79.0	60.9 53.0 46.1		55	77			
80		C	78.5 230.0 238.8	21.8 63.9 66.3	51.2 43.5 41.3		37	76			
81	150-280(I)		160.0 443.5 609.0	44.4 123.2 169.2	27.5 21.0 14.2	1480	37	87	2.4	1.57	427
82		A	150.5 410.6 550.0	41.8 114.0 152.8	25.0 18.0 12.5		30	86			
83		B	130.0 367.0 480.0	36.1 101.9 133.3	22.5 15.0 11.7		22	84			

SLQS型泵性能参数 SLQS TYPE PUMP PERFORMANCE

序号 No.	泵型号 Pump type		流量 Capacity (m³/h)	流量 Capacity (L/s)	扬程 Head (m)	转速 Speed (r/min)	电机功率 Motor power (kW)	效率 Eff. (%)	必需汽蚀余量 (NPSH)r (m)	排气量 (m³/min)	泵净重 Weight (kg)
84	150-280(I)	C	123.0 338.2 395.0	34.1 93.9 109.7	17.4 11.5 10.0	1480	18.5	77	2.4	1.57	427
85	150-280		140.0 397.0 525.0	38.9 110.3 145.8	27.5 20.4 14.2	1480	30	86	2.5	1.57	427
86		A	135.0 362.4 496.0	37.5 100.7 137.8	24.1 17.0 11.9		30	85			
87		B	128.0 340.7 446.0	35.6 94.6 123.9	21.8 14.5 10.8		22	84			
88		C	120.0 318.1 380.0	33.3 88.4 105.6	17.5 11.5 9.3		18.5	80			
89	150-350(I)		180.0 447.5 592.0	50.0 124.3 164.4	45.8 38.0 31.2	1480	75	85	2.5	1.57	439
90		A	175.0 404.2 580.0	48.6 112.3 161.1	38.6 31.0 22.4		55	83			
91		B	162.0 363.0 495.0	45.0 100.8 137.5	33.1 25.0 18.1		37	81			
92		C	150.0 324.7 421.0	41.7 90.2 116.9	27.8 20.0 14.9		30	78			
93	150-350		150.0 407.5 550.0	41.7 113.2 152.8	45.0 35.0 26.8	1480	55	84	2.5	1.57	439
94		A	140.0 374.1 471.0	38.9 103.9 130.8	37.9 29.5 23.2		45	82			
95		B	130.0 344.4 460.0	36.1 95.7 127.8	32.1 25.0 17.5		37	80			
96		C	125.0 311.9 390.0	34.7 86.6 108.3	26.1 20.5 15.3		30	78			
97	150-450(I)		200.0 515.5 640.0	55.6 143.2 177.8	76.1 66.0 57.1	1480	132	82	3.0	1.57	560
98		A	190.0 468.4 600.0	52.8 130.1 166.7	64.0 54.5 45.0		110	81			
99		B	180.0 418.5 540.0	50.0 116.3 150.0	52.3 43.5 35.0		75	80			
100		C	175.0 375.4 468.0	48.6 104.3 130.0	42.1 35.0 27.8		55	78.5			
101	150-450		150.0 440.0 582.0	41.7 122.2 161.7	72.1 60.0 48.2	1480	110	81	3.4	1.57	560
102		A	140.0 401.7 550.0	38.9 111.6 152.8	60.0 50.0 36.9		90	80.5			
103		B	129.0 359.3 490.0	35.8 99.8 136.1	49.5 40.0 30.5		75	80			
104		C	115.0 326.3 430.0	31.9 90.6 119.4	40.0 33.0 24.8		45	78			

SLQS型泵性能参数 SLQS TYPE PUMP PERFORMANCE

序号 No.	泵型号 Pump type		流量 Capacity (m³/h)	流量 Capacity (L/s)	扬程 Head (m)	转速 Speed (r/min)	电机功率 Motor power (kW)	效率 Eff. (%)	必需汽蚀余量 (NPSH)r (m)	排气量 (m³/min)	泵净重 Weight (kg)
105	150-570(I)		200.0 584.0 730.0	55.6 162.2 202.8	121.0 105.0 92.1	1480	250	80	3.7	1.57	726
106		A	180.0 536.2 660.0	50.0 148.9 183.3	105.0 88.5 80.0		200	79			
107		B	169.0 493.6 620.0	46.9 137.1 172.2	90.8 75.0 68.0		160	78			
108		C	150.0 450.0 530.0	41.7 125.0 147.2	77.2 61.5 55.9		132	77			
109	150-570		200.0 537.0 620.0	55.6 149.2 172.2	111.0 90.0 81.9	1480	200	79	4.2	1.57	726
110		A	96.3 499.9 580.0	26.7 138.9 161.1	96.0 78.0 70.0		160	78			
111		B	82.8 468.5 540.0	23.0 130.1 150.0	83.0 68.5 61.0		132	77			
112		C	70.0 419.2 500.0	19.4 116.4 138.9	70.0 57.5 50.0		110	76			
113	200-340(I)		250.0 695.5 940.0	69.4 193.2 261.1	40.0 30.0 20.0	1480	75	87.5	3.3	2.46	580
114		A	240.0 641.2 845.0	66.7 178.1 234.7	35.0 25.5 17.5		75	86.5			
115		B	230.0 586.0 750.0	63.9 162.8 208.3	30.8 21.3 16.0		55	85			
116		C	220.0 530.0 610.0	61.1 147.2 169.4	25.0 17.0 15.1		37	79			
117	200-340		250.0 638.0 870.0	69.4 177.2 241.7	37.5 28.0 18.5	1480	75	86.5	2.5	2.46	580
118		A	240.0 596.8 795.0	66.7 165.8 220.8	33.0 24.5 16.8		55	86			
119		B	235.0 552.5 705.0	65.2 153.5 195.8	28.5 21.0 15.1		45	84			
120		C	225.0 497.1 600.0	62.5 138.1 166.7	23.1 17.0 14.0		37	82			
121	200-410(I)		265.0 710.0 990.0	73.6 197.2 275.0	62.8 52.0 40.0	1480	132	86.5	4.2	2.46	597
122		A	249.0 641.9 895.0	69.1 178.3 248.6	64.0 42.5 30.9		110	84.5			
123		B	238.0 586.6 780.0	66.1 163.0 216.7	46.0 35.5 25.0		90	83			
124		C	220.0 525.6 660.0	61.1 146.0 166.7	38.5 28.5 21.0		75	81			
125	200-410		250.0 649.0 865.0	69.4 180.3 240.2	62.1 48.0 37.1	1480	110	85.5	3.0	2.46	597

SLQS型泵性能参数 SLQS TYPE PUMP PERFORMANCE

序号 No.	泵型号 Pump type		流量 Capacity (m^3/h)	流量 Capacity (L/s)	扬程 Head (m)	转速 Speed (r/min)	电机功率 Motor power (kW)	效率 Eff. (%)	必需汽蚀余量 (NPSH)r (m)	排气量 (m^3/min)	泵净重 Weight (kg)
126	200-410	A	236.0 596.1 750.0	65.6 165.6 208.3	52.2 40.5 32.5	1480	90	84	3.0	2.46	597
127		B	215.0 550.2 720.0	59.7 152.8 200.0	44.2 34.5 25.0		75	82			
128		C	209.0 495.7 590.0	58.1 137.7 163.9	35.2 28.0 22.1		55	78			
129	200-530(I)		475.0 818.0 1080.0	131.9 227.2 300.0	102.0 91.0 77.5	1480	280	83	3.5	2.46	815
130		A	460.0 750.0 965.0	127.8 208.3 268.1	86.0 76.5 66.2		250	82			
131		B	440.0 687.9 905.0	122.2 191.1 251.4	71.0 62.5 52.1		200	80			
132		C	420.0 630.0 795.0	116.7 175.0 220.8	55.0 47.5 41.8		132	78.5			
133	200-530		260.0 735.0 955.0	72.2 204.2 265.3	98.0 81.7 66.9	1480	250	82	3.0	2.46	815
134		A	250.0 670.5 880.0	69.4 186.3 244.4	82.8 68.0 57.5		180	81			
135		B	240.0 633.0 820.0	66.7 175.8 227.8	68.3 55.0 46.1		160	80			
136		C	230.0 576.3 720.0	63.9 160.1 200.0	54.8 43.5 38.0		110	78			
137	200-660(I)		280.0 793.0 935.0	77.8 220.3 259.7	167.0 150.0 140.0	1480	450	80	3.1	2.46	1090
138		A	270.0 729.7 900.0	75.0 202.7 250.0	144.0 127.0 115.0		355	78.5			
139		B	260.0 669.8 864.0	72.2 186.0 240.0	124.0 107.0 93.0		315	77			
140		C	250.0 637.4 770.0	69.4 177.0 213.9	100 88.0 80.0		250	76			
141	200-660		250.0 721.0 860.0	69.4 200.2 238.9	156.0 132.5 120.0	1480	400	79	2.9	2.46	1090
142		A	240.0 670.2 790.0	66.7 186.2 219.4	132.0 114.5 103.0		315	78.5			
143		B	230.0 621.6 720.0	63.9 172.7 200.0	114.0 98.5 90.0		250	78			
144		C	215.0 570.6 690.0	59.7 158.5 191.7	98.0 83.0 72.0		200	77			
145	250-390(I)		400.0 1052.0 1450.0	111.1 292.2 402.8	50.0 39.0 28.0	1480	160	88	4.2	2.46	850
146		A	380.0 967.7 1310.0	105.6 268.8 363.9	44.9 33.0 24.0		132	86			

SLQS型泵性能参数 SLQS TYPE PUMP PERFORMANCE

序号 No.	泵型号 Pump type		流量 Capacity (m^3/h)	流量 Capacity (L/s)	扬程 Head (m)	转速 Speed (r/min)	电机功率 Motor power (kW)	效率 Eff. (%)	必需汽蚀余量 (NPSH)r (m)	排气量 (m^3/min)	泵净重 Weight (kg)
147	250-390(I)	B	379.0 915.3 1160.0	105.3 254.3 322.2	38.0 27.0 20.2	1480	110	83	4.2	2.46	850
148		C	350.0 843.3 990.0	97.2 234.3 275.0	31.8 20.0 16.1		75	77.5			
149	250-390		400.0 1030.5 1400.0	111.1 286.3 388.9	50.0 37.0 25.6	1480	132	87	4.0	2.46	850
150		A	390.0 958.3 1290.0	108.3 266.2 358.3	44.0 32.0 22.2		110	86			
151		B	375.0 880.3 1170.0	104.2 244.5 325.0	38.0 27.0 21.8		110	84			
152		C	350.0 819.6 1030.0	97.2 227.7 286.1	32.0 22.0 16.0		75	82			
153	250-470(I)		420.0 1174.5 1608.0	116.7 326.3 447	82.8 66.0 50.0	1480	280	87	3.3	2.46	1050
154		A	400.0 1072.2 1450.0	111.1 297.8 402.8	69.0 55.0 41.6		220	85			
155		B	370.0 975.2 1250.0	102.8 270.9 347.2	58.0 45.5 36.0		200	83			
156		C	330.0 903.3 1090.0	91.7 250.9 302.8	49.6 37.5 31.2		160	80			
157	250-470		400.0 1081.0 1450.0	111.1 300.3 402.8	75.0 54.5 38.0	1480	220	84	3.5	2.46	1050
158		A	370.0 1003.9 1300.0	102.8 278.9 361.1	64.0 47.0 33.5		200	82.5			
159		B	350.0 911.0 1170.0	97.2 253.0 325.0	55.0 40.5 30.0		160	80.5			
160		C	340.0 830.0 1020.0	94.4 230.6 283.3	46.0 34.5 26.3		110	78.5			
161	250-610(I)		800.0 1243.0 1640.0	222.2 345.3 455.6	131.0 116.0 98.0	1480	560	84	3.8	2.46	1400
162		A	750.0 1154.1 1600.0	208.3 320.6 444.4	115.0 100.0 79.0		450	83.5			
163		B	700.0 1051.4 1480.0	194.4 292.0 411.1	95.0 83.0 63.0		355	83			
164		C	650.0 970.0 1360.0	180.6 269.4 377.8	78.0 66.0 50.0		250	82.5			
165	250-610		400.0 1045.0 1415.0	111.1 290.3 393.1	126.0 104.0 81.5	1480	400	83	3.1	2.46	1400
166		A	390.0 972.1 1360.0	108.3 270.0 377.8	110.0 90.0 70.0		315	82.5			
167		B	380.0 884.5 1240.0	105.6 245.7 344.4	91.0 74.5 58.0		250	81.5			

SLQS型泵性能参数 SLQS TYPE PUMP PERFORMANCE

序号 No.	泵型号 Pump type		流量 Capacity (m^3/h)	流量 Capacity (L/s)	扬程 Head (m)	转速 Speed (r/min)	电机功率 Motor power (kW)	效率 Eff. (%)	必需汽蚀余量 (NPSH)r (m)	排气量 (m^3/min)	泵净重 Weight (kg)
168	250-610	C	335.0 806.9 1120.0	101.4 224.1 311.1	75.0 62.0 49.5	1480	200	80.5	3.1	2.46	1400
169	300-330(I)		500.0 1099.0 1475.0	138.9 305.3 409.7	36.0 24.5 17.0	1480	110	86	4.6	2.46	910
170		A	480.0 1020.0 1425.0	133.3 283.3 395.8	31.8 19.8 12.1		90	84.5			
171		B	460.0 970.0 1290.0	127.8 269.4 358.3	26.5 15.5 9.0		75	82			
172		C	440.0 920.0 1170.0	122.2 255.6 325.0	22.3 11.5 7.5		45	80			
173	300-330		400.0 940.0 1260.0	111.1 261.1 350.0	32.1 23.0 15.0	1480	90	85	3.6	2.46	910
174		A	390.0 876.6 1200.0	108.3 243.5 333.3	27.9 20.0 12.0		75	84			
175		B	370.0 801.0 1080.0	102.8 222.5 300.0	24.1 16.7 11.0		55	81			
176		C	350.0 705.0 950.0	97.2 195.8 263.9	20.5 13.7 9.0		37	77			
177	300-450(I)		700.0 1678.5 2380.0	194.4 466.3 661.1	67.5 53.0 37.0	1480	315	88	5.2	2.46	1400
178		A	660.0 1576.8 2100.0	183.3 438.0 583.3	59.2 45.0 32.0		280	86.5			
179		B	620.0 1476.0 1800.0	172.2 410.0 500.0	50.0 36.5 27.5		200	84			
180		C	600.0 1360.8 1450.0	166.7 378.0 402.8	41.0 27.5 24.5		160	79			
181	300-450		600.0 1620.0 2240.0	166.7 450.0 622.2	68.0 51.5 32.5	1480	315	87.5	5.3	2.46	1400
182		A	580.0 1519.2 2040.0	161.1 422.0 566.7	60.0 45.0 29.4		250	86.5			
183		B	560.0 1422.0 1860.0	155.6 395.0 516.7	51.0 37.5 26.2		200	84			
184		C	540.0 1332.0 1620.0	150.0 370.0 450.0	41.9 30.5 23.5		160	81.5			
185	300-550(I)		700.0 1750.0 2350.0	194.4 486.1 652.8	115.0 94.0 76.0	1480	630	86	4.2	2.46	1930
186		A	680.0 1645.2 2170.0	188.9 457.0 602.8	92.0 76.0 61.5		450	85.5			
187		B	650.0 1573.2 2130.0	180.6 437.0 591.7	77.5 62.0 47.0		355	85			
188		C	620.0 1515.6 1980.0	172.2 421.0 550.0	65.0 50.0 37.5		280	83.5			

SLQS型泵性能参数 SLQS TYPE PUMP PERFORMANCE

序号 No.	泵型号 Pump type		流量 Capacity (m^3/h)	流量 Capacity (L/s)	扬程 Head (m)	转速 Speed (r/min)	电机功率 Motor power (kW)	效率 Eff. (%)	必需汽蚀余量 (NPSH)r (m)	排气量 (m^3/min)	泵净重 Weight (kg)
189	300-550		600.0 1550.0 2130.0	166.7 430.5 591.7	102.0 80.0 60.0	1480	450	84.5	3.9	2.46	1930
190		A	590.0 1447.2 1980.0	163.9 402.0 550.0	86.4 67.0 50.5		355	83.5			
191		B	580.0 1360.8 1820.0	161.1 378.0 505.6	73.0 57.0 44.0		280	83			
192		C	570.0 1281.6 1600.0	158.3 356.0 461.1	61.0 47.5 37.2		250	82			
193	300-710(I)		900.0 1836.0 2100.0	250.0 510.0 583.3	183.0 160.0 150.6	1480	1120	85	3.5	2.46	2150
194		A	960.0 1735.2 2030.0	266.7 482.0 563.9	160.0 136.0 126.0		900	84.6			
195		B	800.0 1623.6 1880.0	222.2 451.0 522.2	135.0 112.0 104.0		630	84.3			
196		C	700.0 1537.2 1600.0	194.4 427.0 444.4	110.5 91.0 77.0		560	84			
197	300-710		600.0 1690.0 2160.0	166.7 469.4 600.0	174.0 139.0 118.0	1480	900	83.5	4	2.46	2150
198		A	580.0 1573.2 2000.0	161.1 437.0 555.6	150.0 119.0 100.0		710	83			
199		B	540.0 1450.8 1820.0	150.0 403.0 505.6	124.0 99.0 82.4		560	82.5			
200		C	510.0 1342.8 1650.0	141.7 373.0 458.3	103.0 81.0 70.0		400	82			
201	350-380(I)		600.0 1733.0 2280.0	166.7 481.4 633.3	45.5 32.0 20.5	1480	200	86.5	6.2	2.46	1200
202		A	580.0 1692.0 2160.0	161.1 470.0 600.0	40.0 26.5 17.0		160	85			
203		B	560.0 1641.6 2080.0	155.5 456.0 577.8	34.0 21.0 12.8		132	83			
204		C	540.0 1602.0 1900.0	150.0 445.0 527.8	27.9 15.0 9.0		110	80.5			
205	350-380		500.0 1424.0 1940.0	138.9 395.6 538.9	42.5 31.0 21.8	1480	160	85.5	5	2.46	1200
206		A	460.0 1335.6 1800.0	127.8 371.0 500.0	37.9 26.3 17.0		132	84			
207		B	430.0 1270.8 1610.0	119.4 353.0 447.2	32.5 22.5 15.5		110	82			
208		C	410.0 1188.0 1400.0	113.9 330.0 388.9	27.5 17.8 17.1		90	78			
209	350-440(I)		1000.0 2745.0 3500.0	277.8 762.5 972.2	59.0 43.5 31.0	1480	450	87.5	8.5	2.46	1450

SLQS型泵性能参数 SLQS TYPE PUMP PERFORMANCE

序号 No.	泵型号 Pump type		流量 Capacity (m^3/h)	流量 Capacity (L/s)	扬程 Head (m)	转速 Speed (r/min)	电机功率 Motor power (kW)	效率 Eff. (%)	必需汽蚀余量 (NPSH)r (m)	排气量 (m^3/min)	泵净重 Weight (kg)
210	350-440(I)	A	950.0 2635.2 3450.0	263.9 732.0 958.3	50.5 35.0 22.0	1480	355	85.5	8.5	2.46	1450
211		B	900.0 2563.2 3250.0	250.0 712.0 902.8	43.0 27.5 18.5		280	84			
212		C	890.0 2484.0 3200.0	247.2 690.0 888.9	36.0 21.5 13.0		220	81			
213	350-440		750.0 2235.0 3000.0	208.3 620.8 833.3	59.0 42.5 30.0	1480	355	86.5	6.5	2.46	1450
214		A	700.0 2088.0 2750.0	194.4 580.0 763.9	51.5 36.0 25.0		280	84.5			
215		B	680.0 1987.2 2400.0	188.9 552.0 666.7	45.0 30.0 23.0		250	82			
216		C	650.0 1847.6 2010.0	180.6 516.0 558.3	38.0 25.0 22.0		200	78.5			
217	350-520(I)		1350.0 2610.0 3700.0	375.0 725.0 1027.8	94.0 70.0 48.3	1480	630	88.5	6.7	2.46	2000
218		A	1100.0 2430.0 3500.0	305.6 675.0 972.2	82.0 60.0 42.0		560	87			
219		B	750.0 2232.0 2850.0	208.3 620.0 791.7	73.0 50.0 37.0		400	86			
220		C	505 2070 2350	140.3 575 652.8	61 38 33.2		315	79			
221	350-520		850 2450 3350	236.1 680.6 930.6	92 67 47.5	1480	630	88	7	2.46	2000
222		A	800 2268 3200	222.2 630 888.9	81.5 59.5 38		500	87			
223		B	750 2088 2850	208.3 580 791.7	67 50 34.5		400	85			
224		C	700 1944 2500	194.4 540 694.4	60 41.5 30.5		315	83			
225	350-640		1470 2160 2800	408.3 600 777.8	138.5 126.2 107	1480	1000	85	6.9	2.46	2390
226		A	1290 2000 2600	358.3 556 722	128 116 98.3		900	84			
227		B	1185 1920 2500	329.2 533.3 694.4	117.8 106 88.5		800	82			
228		C	1110 1830 2380	308.3 508.3 661	107.8 95.6 78		710	80			
229		D	1050 1695 2200	291.7 470.8 611	93.8 83 68		560	78			
230	400-550(I)		1535 2635 3420	426.3 731.9 950	98 86 70.8	1480	800	85	7	4.94	2300

SLQS型泵性能参数 SLQS TYPE PUMP PERFORMANCE

序号 No.	泵型号 Pump type		流量 Capacity (m^3/h)	流量 Capacity (L/s)	扬程 Head (m)	转速 Speed (r/min)	电机功率 Motor power (kW)	效率 Eff. (%)	必需汽蚀余量 (NPSH)r (m)	排气量 (m^3/min)	泵净重 Weight (kg)
231	400-550(I)	A	1470 2520 3270	408.3 700 908.3	91 79 63.9	1480	710	83	7	4.94	2300
232		B	1420 2418 3140	394 671.6 872	82.6 71.8 56.8		630	81			
233		C	1400 2311.5 3015	388.9 642 837.5	76 64 49		630	79			
234		D	1380 2235.6 2900	383.3 621 805.6	69 57.8 43.8		560	77			
235	400-550		1320 2190 2850	366.7 608.3 791.7	77 63.8 47.2	1480	500	86	5.9	4.94	2300
236		A	1280 2045.5 2660	355.6 568.2 738.9	69.8 57.8 43.8		450	84			
237		B	1230 1882 2450	341.7 522.7 680.6	61.2 51.2 39		400	82			
238		C	1211 1767.6 2300	336.4 491 638.9	53.2 45 34		315	80			
239	400-600		1571 2502 3250	436.4 695 902.8	101.2 90.2 68	1480	800	86	6.9	4.94	2650
240		A	1508 2422 3100	419 672.7 861	93.2 81.8 63		710	84			
241		B	1500 2354 3000	416.7 654 833.3	86 74 54		630	82			
242		C	1470 2225.5 2750	410 618.2 764	78.8 68 51.8		560	80			
243		D	1505 2127.6 2500	418.2 591 722	69 59.8 47		500	78			
244	400-600(I)		1919 3176.5 4100	533 882.4 1139	129.7 113 93.6	1480	1250	86	7.5	4.94	2650
245		A	1780 3007 3910	494.4 835.3 1086	119 103.6 83.6		1120	84			
246		B	1740 2922.4 3800	483.3 811.8 1055.6	109.2 93 70.8		1000	82			
247		C	1600 2732 3550	444.4 758.8 986	99.8 83.7 63		900	80			
248		D	1530 2641.6 3380	425 706 938.9	90 74 57		800	78			
249	500-520(I)		1900 3217.5 3960	527.8 893.8 1100	33.2 25 17.7	980	280	87	4.8	3.26	2500
250		A	1830 3088 3800	508.3 857.8 1055.6	30.5 23 16.3		250	86			
251		B	1750 2964.5 3650	486 823.3 1013.9	28.6 21 15.3		220	84			

SLQS型泵性能参数 SLQS TYPE PUMP PERFORMANCE

序号 No.	泵型号 Pump type		流量 Capacity (m^3/h)	流量 Capacity (L/s)	扬程 Head (m)	转速 Speed (r/min)	电机功率 Motor power (kW)	效率 Eff. (%)	必需汽蚀余量 (NPSH)r (m)	排气量 (m^3/min)	泵净重 Weight (kg)
252	500-520(I)	C	1680 2846 3485	466.7 790.6 968	26 18.4 13	980	200	82	4.8	3.26	2500
253		D	1600 2732 3180	444.4 758.9 883.3	23.8 16.3 11.8		185	80			
254	500-520		1480 2777 3600	411 771.4 1000	31.3 22.5 14	980	220	86	4.3	3.26	2500
255		A	1400 2638 3420	388.9 732.8 950	27.8 19.5 12.2		200	84			
256		B	1250 2484 3000	347.2 690 833.3	22 15.6 11.2		160	81			
257		C	1160 2178.5 2790	322.2 605.1 775	18.5 13.8 9.2		132	78			
258	500-650(I)		1850 3510 4500	513.9 975 1250	52.5 41.5 31	980	500	88.5	5.7	3.26	2770
259		A	1800 3352.5 4230	500 931 1175	49.8 38.7 28.5		450	86			
260		B	1740 3172.5 4000	483.3 881 1111.7	46.4 36 26.5		400	84			
261		C	1660 3015 3830	461.1 837.5 1064	42.2 33.2 25		355	82			
262		D	1560 2767.5 3600	433.3 768.8 1000	37.6 29.7 21.8		315	80			
263	500-650		1820 2992 3890	505.6 831.3 1080	41.8 33.7 23.2	980	355	87	4.8	3.26	2770
264		A	1730 2835 3695	480.6 787.5 1026	37.8 30.2 21		315	86			
265		B	1635 2722.5 3490	454 756.3 969.4	34 27.7 19		280	82			
266		C	1535 2642.5 3280	426.4 706 911	29 24 17		250	78			
267	500-710(I)		2300 3852 5040	638.9 1070 1400	73.1 64.4 54	980	900	88.5	5.8	3.26	3500
268		A	2200 3672 4840	611.1 1020 1344.4	67.2 59.2 47.1		800	87			
269		B	2100 3470.4 4320	583.3 964 1200	60.3 53 43		710	85			
270		C	2000 3204 3960	555.6 890 1100	56.4 47.7 39		560	83			
271		D	1920 3024 3550	533.3 840 986.1	50 42 34.2		500	81			
272	500-710		1800 3006 3900	500 835 1083	60 49 35.6	980	560	87	5.5	3.26	3500

SLQS型泵性能参数 SLQS TYPE PUMP PERFORMANCE

序号 No.	泵型号 Pump type		流量 Capacity (m^3/h)	流量 Capacity (L/s)	扬程 Head (m)	转速 Speed (r/min)	电机功率 Motor power (kW)	效率 Eff. (%)	必需汽蚀余量 (NPSH)r (m)	排气量 (m^3/min)	泵净重 Weight (kg)
273	500-710	A	1710 2812.5 3700	475 781.3 1027.8	53.6 44.2 31.2	980	450	85	5.5	3.26	3500
274		B	1615 2632.5 3375	448.6 731.3 937.5	47.7 39.3 29		400	83			
275		C	1518 2407.5 3175	421.7 668.7 882	41.5 34.6 26		355	79			
276	500-800(I)		2590 3996 5190	719.4 1110 1441.7	88.7 80.6 67.9	980	1120	89	6.9	3.26	4100
277		A	2460 3600 4680	683.3 1000 1300	78.4 72.8 61.8		900	87			
278		B	2340 3204 4100	650 890 1138.9	69.8 65.3 57		800	85			
279		C	2200 2880 3600	611.1 800 1000	61 58 52		630	83			
280	500-800		2385 3474 4600	662.5 965 1277.8	70.7 62.5 47.5	980	800	88	5.2	3.26	4100
281		A	2265 3330 4370	629 925 1213.9	63.1 55.8 44		710	86			
282		B	2150 3150 4150	597.2 875 1152.8	56.2 49.6 39.2		560	84			
283		C	2050 2970 3940	569.7 825 1094	48 43.6 35.8		500	80			
284	500-860(I)		2520 4183.2 5440	700 1162 1511	124 111.2 96.2	980	1600	89	6.9	3.26	4550
285		A	2380 3996 5410	661.1 1110 1428	112.4 100.7 86		1400	87			
286		B	2250 3780 4870	625 1050 1352.8	102.4 90.4 77.5		1250	83			
287		C	2115 3528 4320	587.5 980 1300	90.4 80.4 70.6		1120	80			
288	500-860		2400 3600 4680	666.7 1000 1300	99.6 90 73	980	1120	88.5	5.5	3.26	4550
289		A	2300 3492 4500	638.9 970 1250	93.4 82.9 68		1000	86			
290		B	2200 3384 4300	611.1 940.3 1194.4	87.2 77.2 63.8		900	84			
291		C	2090 3204 4085	580.6 890 1134.7	81 71.2 59		800	82			
292		D	1985 3081.6 3850	551.4 856 1069	75 65.8 55.6		800	80			
293	600-560(I)		3140 4716 6100	872.2 1310 1694.4	31.9 24.2 14.3	980	400	87	6	3.26	3900

SLQS型泵性能参数 SLQS TYPE PUMP PERFORMANCE

序号 No.	泵型号 Pump type		流量 Capacity (m^3/h)	流量 Capacity (L/s)	扬程 Head (m)	转速 Speed (r/min)	电机功率 Motor power (kW)	效率 Eff. (%)	必需汽蚀余量 (NPSH)r (m)	排气量 (m^3/min)	泵净重 Weight (kg)
294	600-560(I)	A	2970 4428 5670	825 1230 1575	28.5 21.5 13.1	980	355	85	6	3.26	3900
295		B	2790 4046.4 5054	775 1124 1459.7	23.8 17.8 11		250	83			
296		C	2620 3787 4860	727.8 1052 1350	20.2 15.4 10		220	81			
297	600-560		2665 3996 4950	740 1110 1375	27.4 20.2 13.3	980	280	85	6.1	3.26	3900
298		A	2545 3744 4600	707 1040 1277.8	24.2 17.8 11.6		250	83			
299		B	2420 3461.5 4280	672.2 961.5 1188.9	20.7 15.6 10		200	81			
300		C	2300 3157 4000	639 877 1111	17.3 13 8.4		160	79			
301	600-630(I)		3170 4736.5 5940	880.6 1315.7 1650	47 39 30	980	630	88	7.8	3.26	4100
302		A	2980 4420 5580	827.8 1230 1550	40.8 34.1 26		560	86			
303		B	2800 4080 5040	777.8 1133 1400	34.6 29.1 23.2		450	84			
304		C	2630 3755 4450	730.6 1043 1236	29 24.8 20.2		355	80			
305	600-630		2400 3712.5 4640	667 1031 1288.9	39.8 33 25.2	980	450	87	6.2	3.26	4100
306		A	2250 3442.5 4360	625 956 1211	34.8 29 22		355	85			
307		B	2125 3172.5 3990	590 881 1108	30 25 20		280	83			
308		C	2000 2947.5 3600	555.6 818.8 1000	24.5 21.4 18		250	81			
309	600-720(I)		2915 4630 6050	809.7 1286 1680	68.8 58.4 43.4	980	900	89	6.5	3.26	5000
310		A	2740 4320 5680	761 1200 1577.8	60 50 36		800	87			
311		B	2595 4050 5220	721 1125 1450	52.4 43 31.2		630	85			
312		C	2425 3752 4680	673.6 1042 1300	43.8 35.2 26.8		500	83			
313	600-720		2610 3588 4650	725 994 1291.7	61.9 53.7 39	980	710	88	5.2	3.26	5000
314		A	2450 3312 4360	680.6 920 1211	52.2 45.8 32.8		560	86			

SLQS型泵性能参数 SLQS TYPE PUMP PERFORMANCE

序号 No.	泵型号 Pump type		流量 Capacity (m^3/h)	流量 Capacity (L/s)	扬程 Head (m)	转速 Speed (r/min)	电机功率 Motor power (kW)	效率 Eff. (%)	必需汽蚀余量 (NPSH)r (m)	排气量 (m^3/min)	泵净重 Weight (kg)
315	600-720	B	2315 3105 4000	643.1 852.5 1111.1	46.2 40.5 30.8	980	450	84	5.2	3.26	5000
316		C	2150 2902.5 3720	597 806 1033	39.8 35.1 27.5		400	82			
317	600-860(I)		3750 5538 6910	763.9 1538.3 1919.4	102 87.5 70	980	1600	89	8.5	3.26	5200
318		A	3525 5109 6490	949.2 1419.2 1803	91 77 58		1400	87			
319		B	3300 4680 5750	916.7 1300 1597	78 65.5 53		1120	85			
320		C	3000 4355 5050	833.3 1209 1403	65 56 46		900	83			
321	600-860		2950 4356 5660	819.4 1210 1572	77.3 66.2 50.6	980	1000	88	5.9	3.26	5200
322		A	2800 4100 5320	777.8 1138.9 1477.8	69 58.2 42		800	86			
323		B	2650 3818.8 4780	736 1060.8 1327.8	60.2 50.2 37		710	84			
324		C	2490 3482 4250	691.7 967.3 1180.6	52 42.4 32.2		560	80			
325	700-580(I)		4265 6568 8100	1185 1824.4 2250	37.8 29.8 22.6	980	710	87	8.2	3.26	4600
326		A	4180 6322 7840	1161 1756 2177.8	34.4 27.8 21.2		630	85			
327		B	3970 6048 7450	1102.8 1680 2069.4	31.3 25.9 20.9		560	83			
328		C	3770 5895 7000	1047.2 1637.5 1944	28.8 24 20		500	81			
329	700-580		3190 4968 6480	886 1380 1800	34.2 23.5 10.8	980	400	87	6.1	3.26	4600
330		A	3030 4749 6150	841.7 1319 1708	31.2 21.6 10.8		355	85			
331		B	2890 4562 5840	802.8 1267 1622	27.9 19.8 10.7		315	83			
332		C	2745 4355 5550	762.5 1209.7 1541.7	24.4 17.9 10.2		315	81			
333	700-700(I)		3650 6516 8470	1014 1810 2352.8	58.5 43.5 28.2	980	1000	87	8	3.26	6690
334		A	3500 6278 8050	972.2 1744 2236	54.5 40.2 26.2		900	85			
335		B	3360 5971 7560	933.3 1658.6 2100	50.4 36.8 25.2		800	83			

SLQS型泵性能参数 SLQS TYPE PUMP PERFORMANCE

序号 No.	泵型号 Pump type		流量 Capacity (m^3/h)	流量 Capacity (L/s)	扬程 Head (m)	转速 Speed (r/min)	电机功率 Motor power (kW)	效率 Eff. (%)	必需汽蚀余量 (NPSH)r (m)	排气量 (m^3/min)	泵净重 Weight (kg)
336	700-700(I)	C	3225 5742 7130	895.8 1595 1980.6	45 31.8 22.8	980	710	81	8	3.26	6690
337	700-700		3475 5619 7130	965.3 1560.8 1980.6	51 39.2 27.8	980	800	86	7	3.26	6690
338		A	3300 5365 6550	916.7 1790 1819.4	45.2 34.8 26.5		710	84			
339		B	3160 5004 6200	877.8 1390 1722	40.2 31.4 24.2		560	82			
340		C	3000 4631.5 5760	833.3 1286.5 1600	35.5 27.2 21.2		500	80			
341	700-830(I)		4680 7416 9850	1300 2060 2736	93 79.6 58	980	2000	89	8.8	3.26	7000
342		A	4425 6959 9180	1229 1933 2550	81.8 67.8 48		1600	87			
343		B	4200 6552 8420	1166.7 1820 2339	70.8 58 42.8		1400	85			
344		C	3950 6012 7520	1097.2 1670 2086	59 47.5 36		1000	83			
345	700-830		3465 5400 6620	962.5 1500 1939	72 60 46	980	1120	88	6.6	3.26	7000
346		A	3270 4950 5900	908.3 1375 1639	63.5 53.8 42.2		900	86			
347		B	3070 4408 5260	852.8 1224.4 1461	55 46.5 38.8		710	84			
348		C	2885 3898 4650	801.4 1083 1291.7	47 41.3 35.2		630	82			
349	800-770(I)		5870 9090 11000	1630.5 2525 3055.6	36.6 26.8 18.2	730	800	87	7	2.43	7730
350		A	5575 8622 10370	1508.6 2395 2880.6	33.6 24.3 16.3		710	85			
351		B	5295 8280 9850	1471 2300 2736	30.9 22.3 14.8		710	83			
352		C	5030 7860 9290	1397.2 2183.3 2580.6	28.2 19.8 13.5		560	81			
353	800-770		4825 7273 9180	1340.3 2020 2550	29.8 22.3 13.9	730	560	86	7	2.43	7730
354		A	4585 6966 8720	1273.6 1935 2422.2	27.8 20.6 12.5		500	84			
355		B	4355 6599 8240	1209.7 1833 2289	25.1 18.5 11.4		450	82			

SLQS型泵性能参数 SLQS TYPE PUMP PERFORMANCE

序号 No.	泵型号 Pump type		流量 Capacity (m^3/h)	流量 Capacity (L/s)	扬程 Head (m)	转速 Speed (r/min)	电机功率 Motor power (kW)	效率 Eff. (%)	必需汽蚀余量 (NPSH)r (m)	排气量 (m^3/min)	泵净重 Weight (kg)
356	800-770	C	4135 6246 7700	1148.6 1735 2139	22.8 16.5 10.6	730	400	80	7	2.43	7730
357	800-880(I)		6375 9022.5 11620	1770.8 2506 3227.8	53.8 45.8 34.6	730	1400	88	6.3	2.43	8050
358		A	6120 8658 11160	1700 2405 3100	50 42.2 32.2		1250	86			
359		B	5815 8262 10600	1615.3 2295 2944.4	45.4 38.5 29.6		1120	84			
360		C	5550 7884 10120	1541.7 2190 2811	41.5 35.4 27		1000	80			
361		D	5270 7452 9620	1463.9 2070 2672.2	37 32.2 24.5		900	80			
362	800-880		4790 7455 9800	1330.6 2071 2722.2	51.5 43 31.2	730	1120	87	5.8	2.43	8050
363		A	4600 7142 9250	1277.8 1984 2569.4	46.8 38.8 28		1000	85			
364		B	4400 6768 8830	1222.2 1880 2452.7	42.4 34.6 23.8		900	83			
365		C	4180 6426 8310	1161 1785 2308.3	37.8 30.6 20		710	81			
366		D	3970 6030 7865	1102.8 1675 2185	32.7 26.8 16.7		630	79			
367	800-980(I)		6600 9810 11660	1833 2725 3239	73.8 62.5 51.2	730	2000	89	6.7	2.43	8530
368		A	6335 9300 11090	1759.7 2583.3 3080.6	66 55.3 45.3		1800	87			
369		B	6080 8892 10400	1689 2470 2889	59.5 49.4 41.2		1600	85			
370		C	5770 8525 9685	1603 2368 2690	53.8 44.3 38.8		1400	83			
371	800-980		5300 8017 10850	1472 2227 3014	61.8 52.2 36	730	1400	89	5.7	2.43	8530
372		A	5125 7668 10260	1423.6 2130 2850	56.8 47.7 33.5		1250	87			
373		B	4920 7236 9540	1366.7 2010 2650	51.6 48.2 30.4		1250	85			
374		C	4720 6840 8820	1311 1900 2450	46.4 39 28		1000	83			
375		D	4530 6408 8258	1358.3 1780 2291.7	41.2 35 25		800	81			

SLQS型泵性能曲线图 SLQS TYPE PUMP PERFORMANCE CURVE CHART

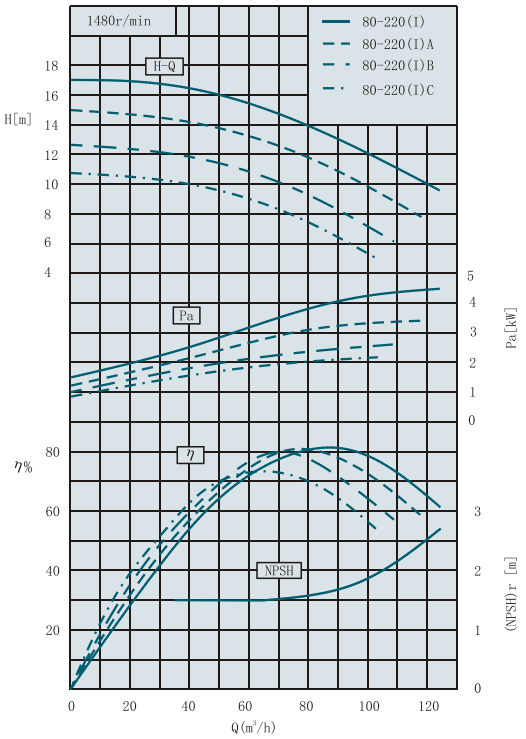

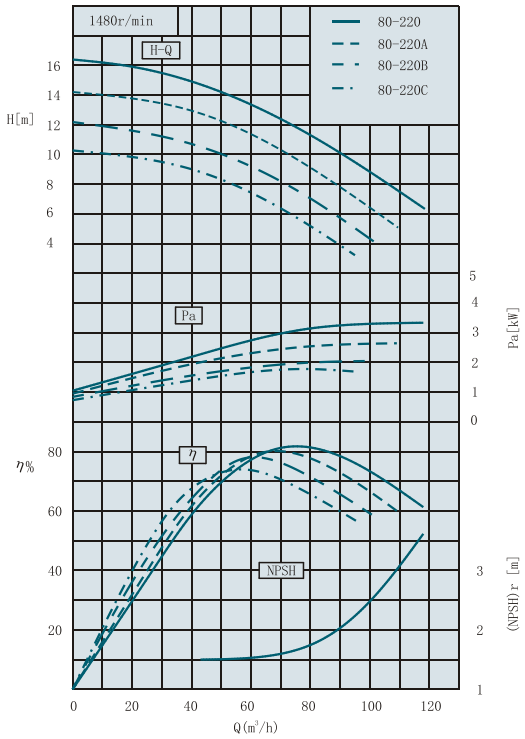

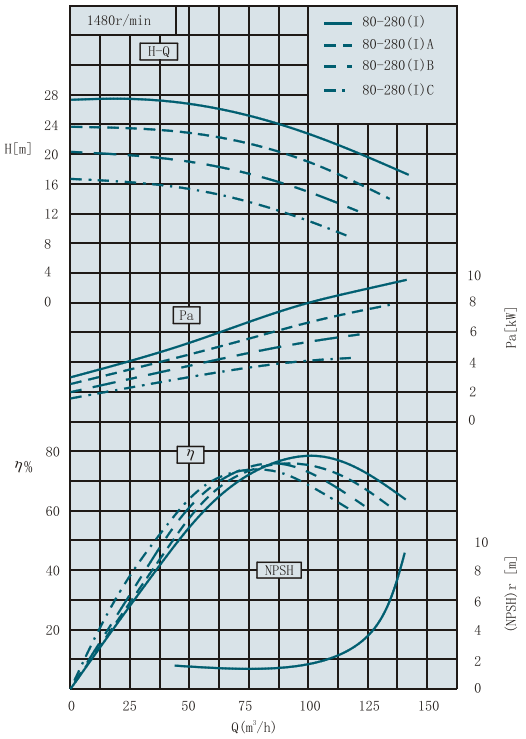

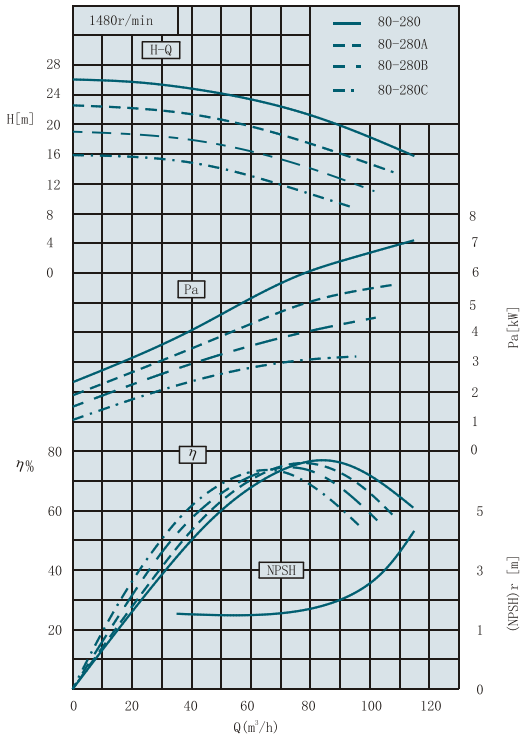

SLQS型泵性能曲线图 SLQS TYPE PUMP PERFORMANCE CURVE CHART

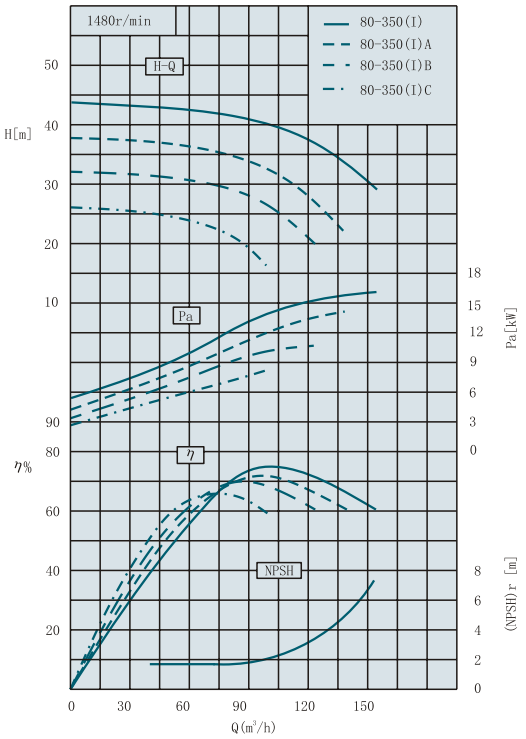

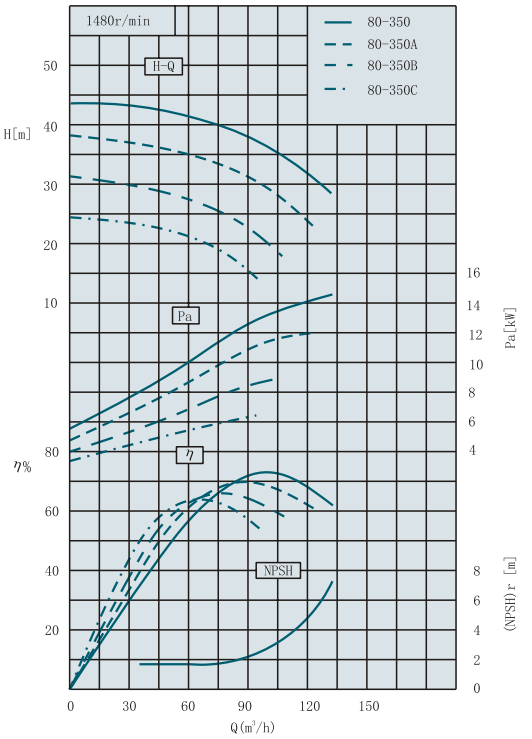

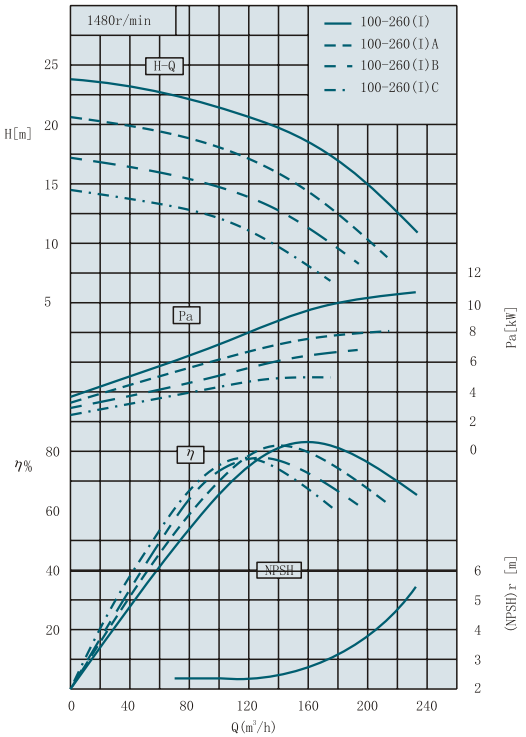

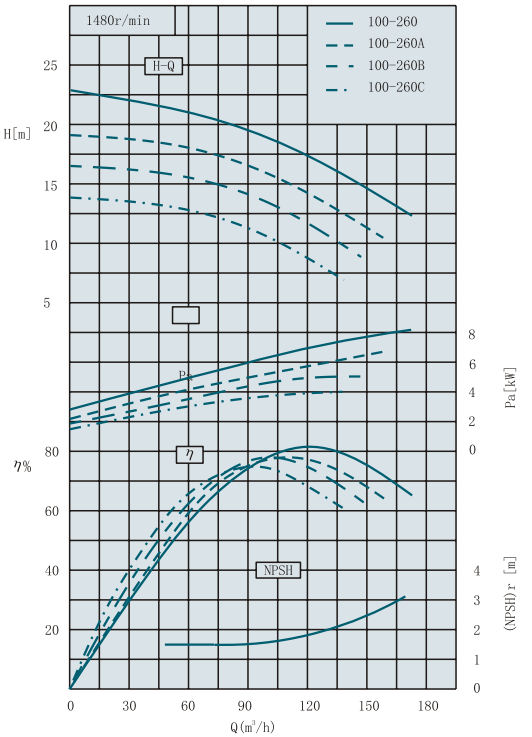

SLQS型泵性能曲线图 SLQS TYPE PUMP PERFORMANCE CURVE CHART

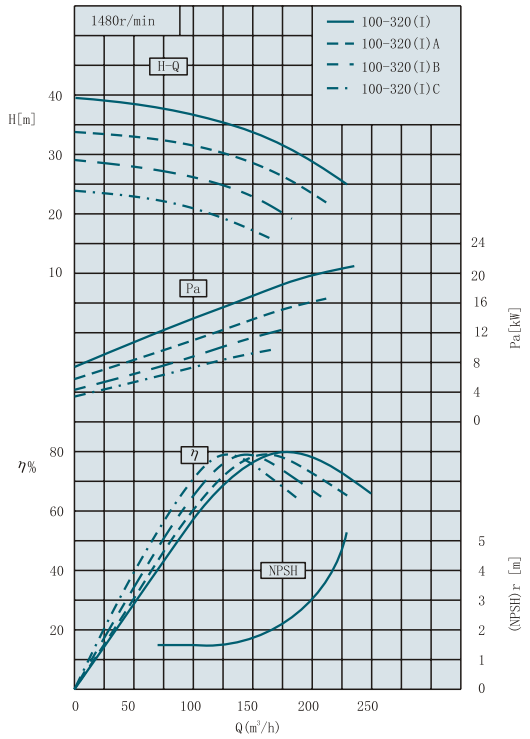

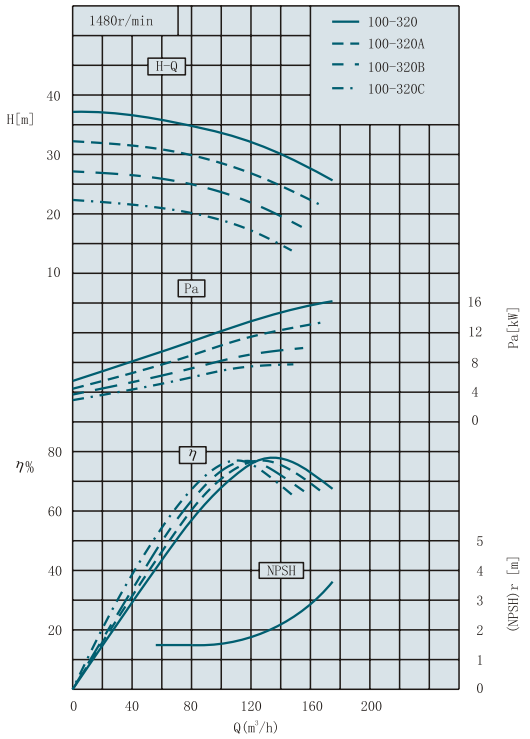

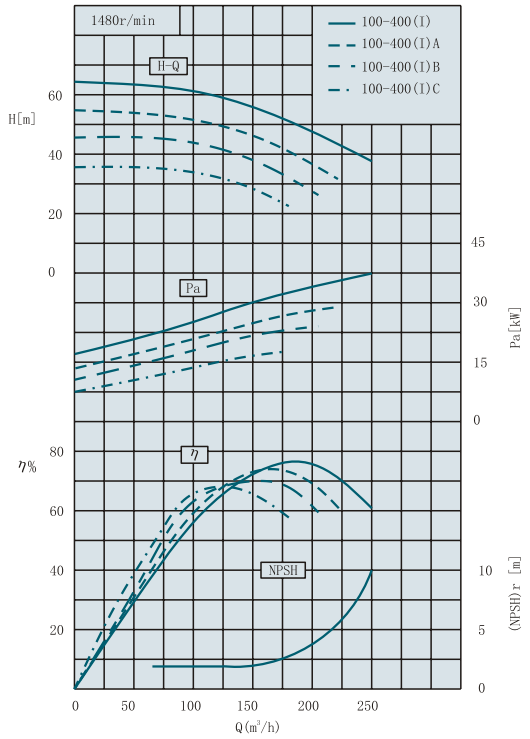

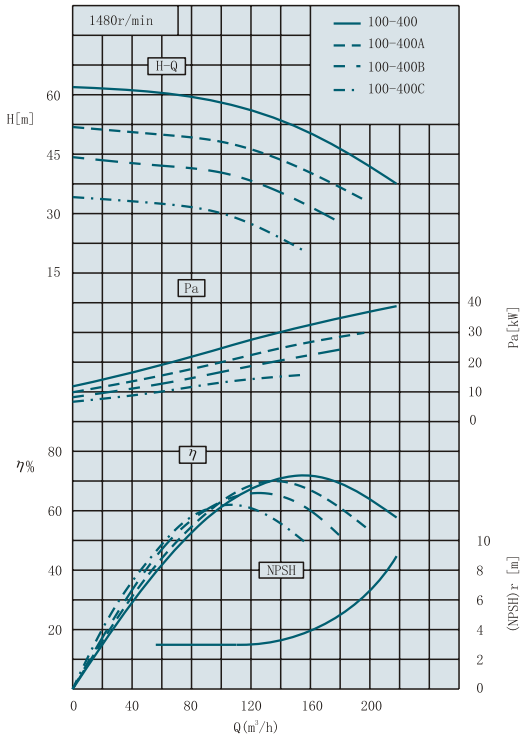

SLQS型泵性能曲线图 SLQS TYPE PUMP PERFORMANCE CURVE CHART

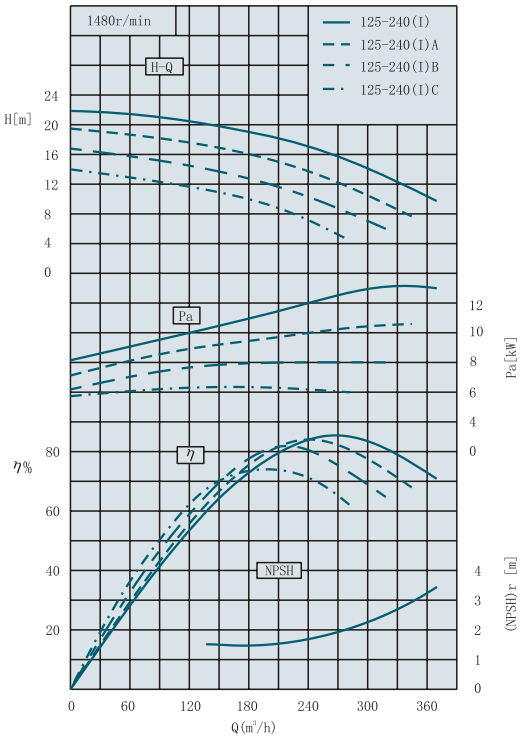

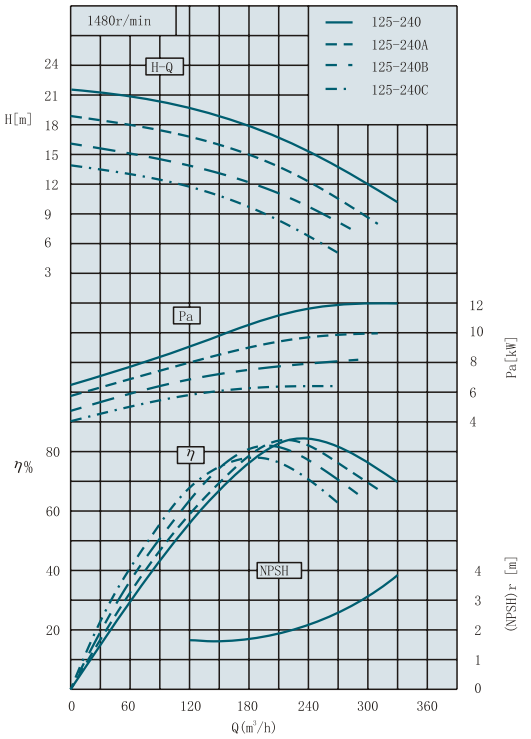

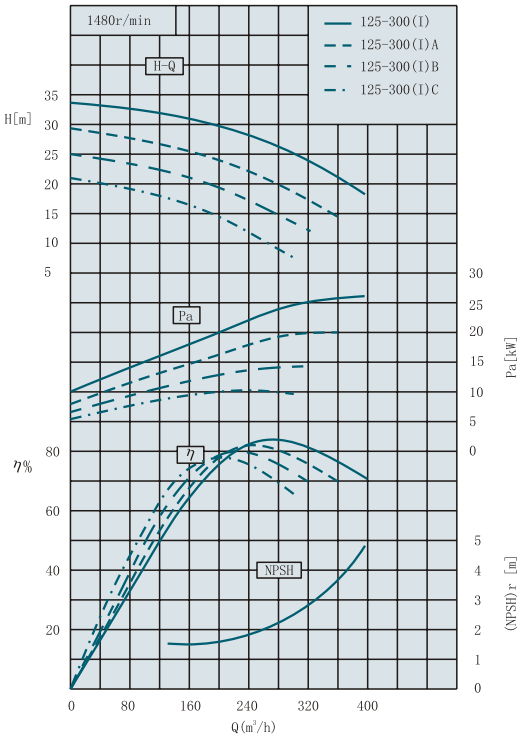

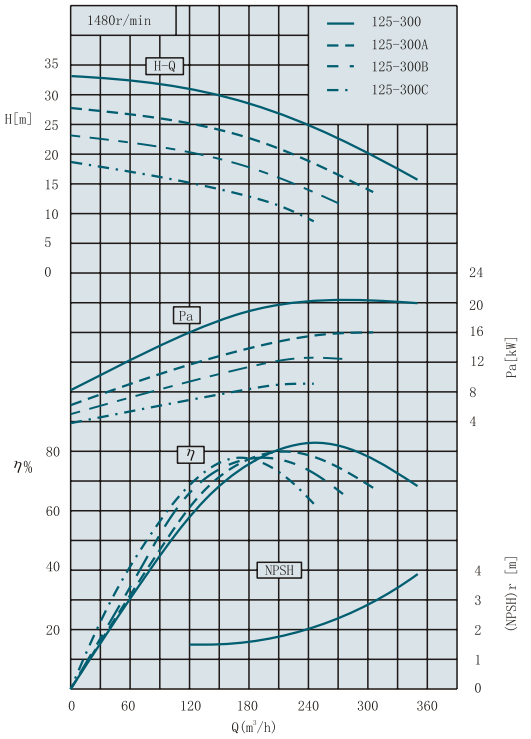

SLQS型泵性能曲线图 SLQS TYPE PUMP PERFORMANCE CURVE CHART

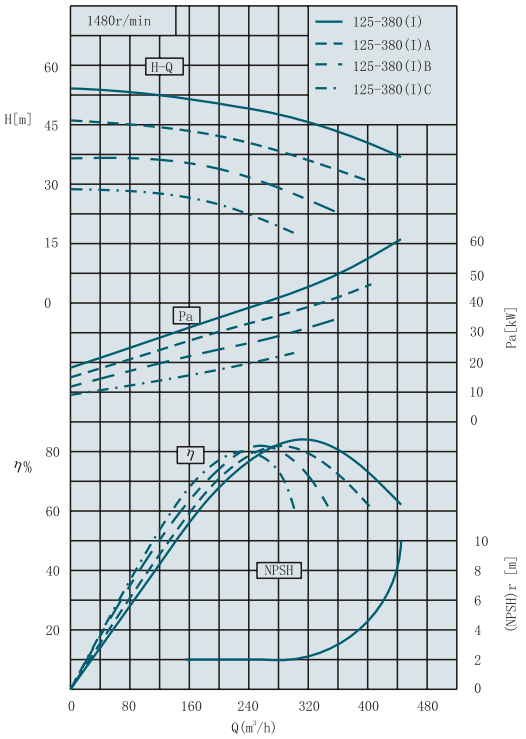

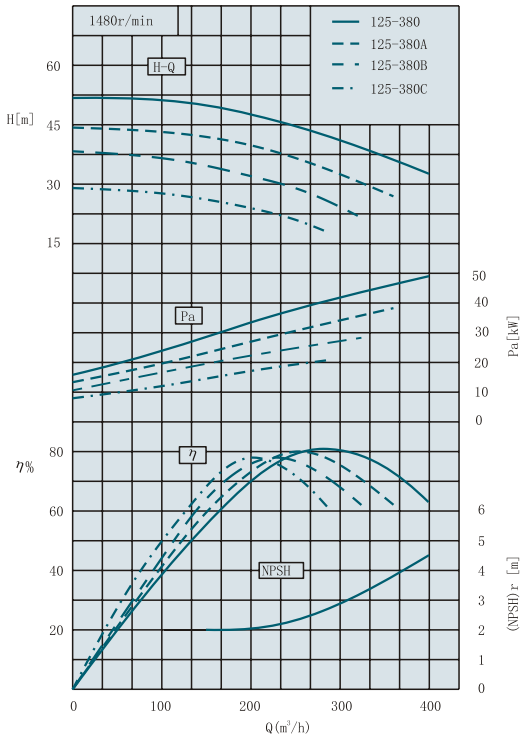

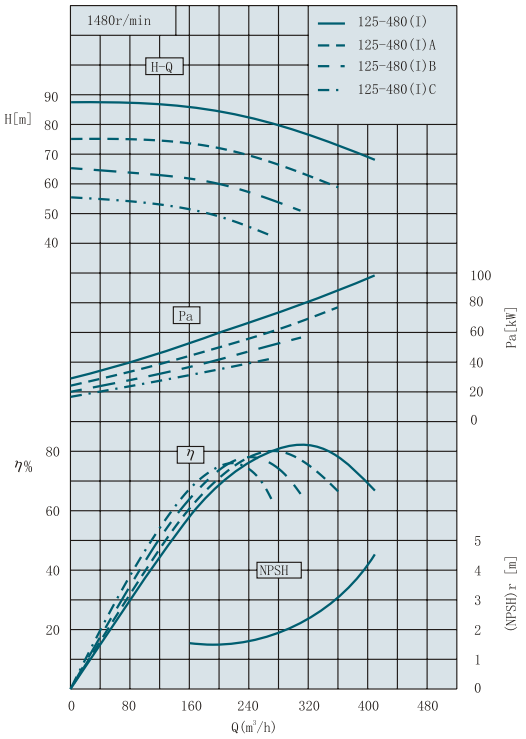

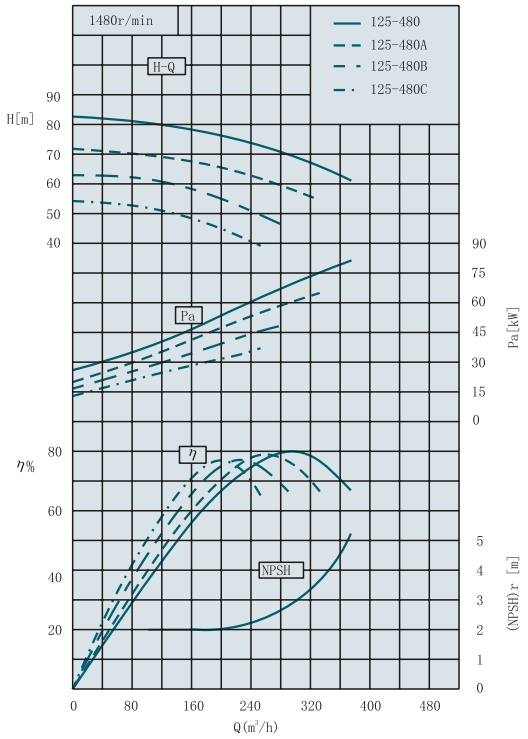

SLQS型泵性能曲线图 SLQS TYPE PUMP PERFORMANCE CURVE CHART

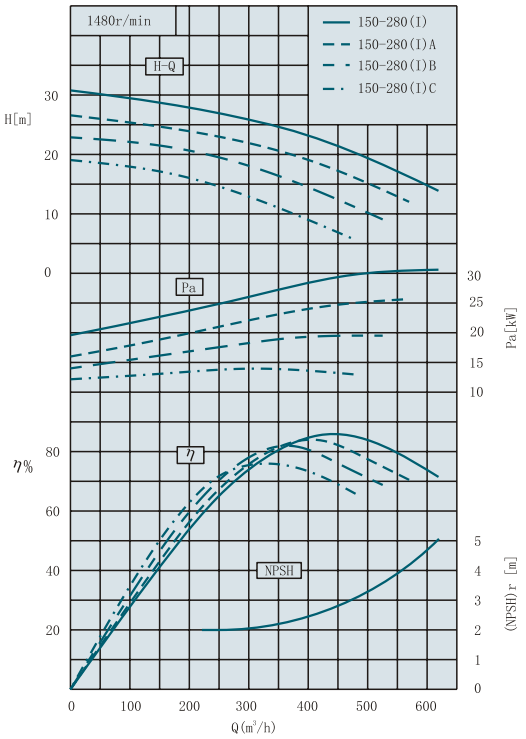

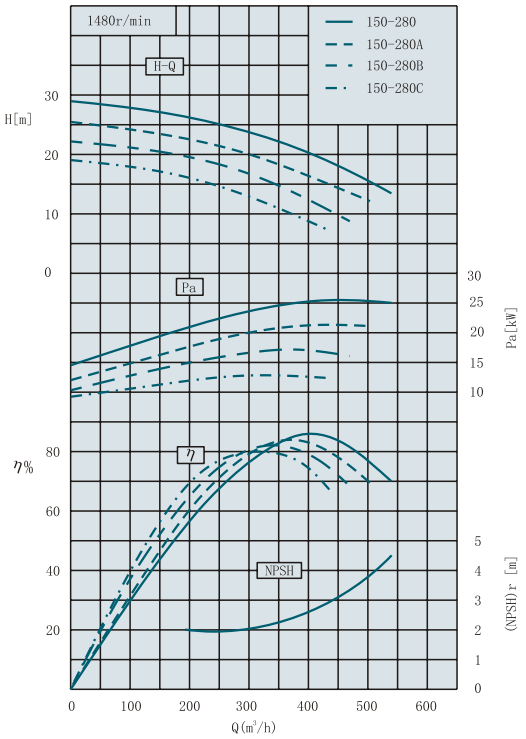

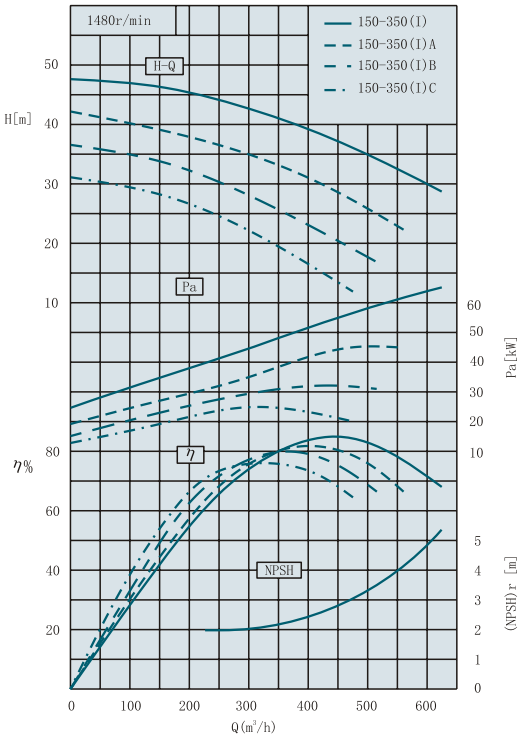

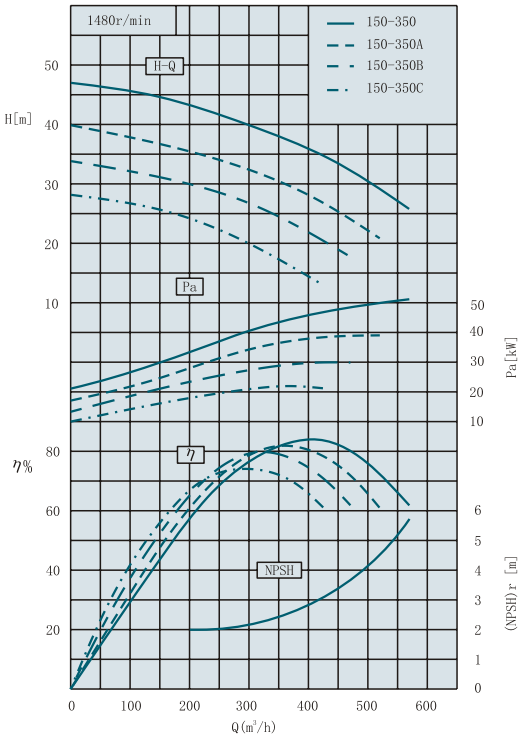

SLQS型泵性能曲线图 SLQS TYPE PUMP PERFORMANCE CURVE CHART

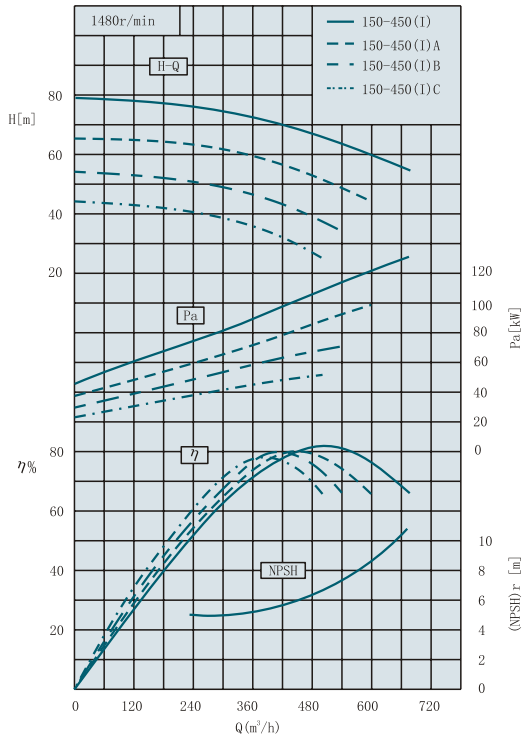

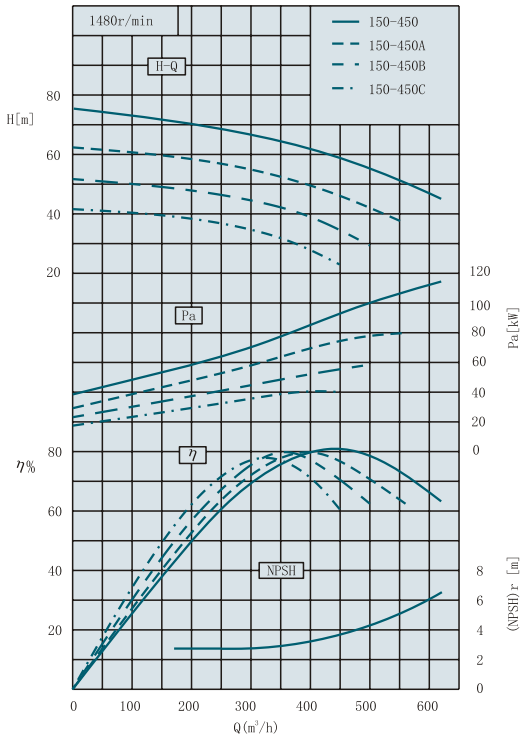

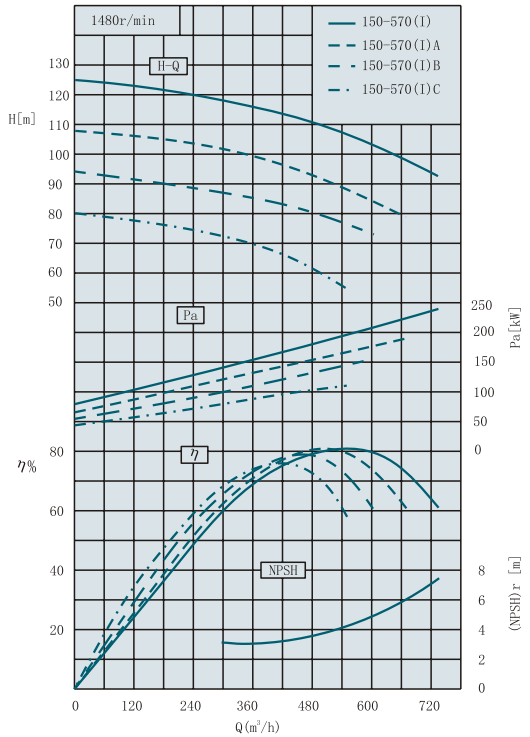

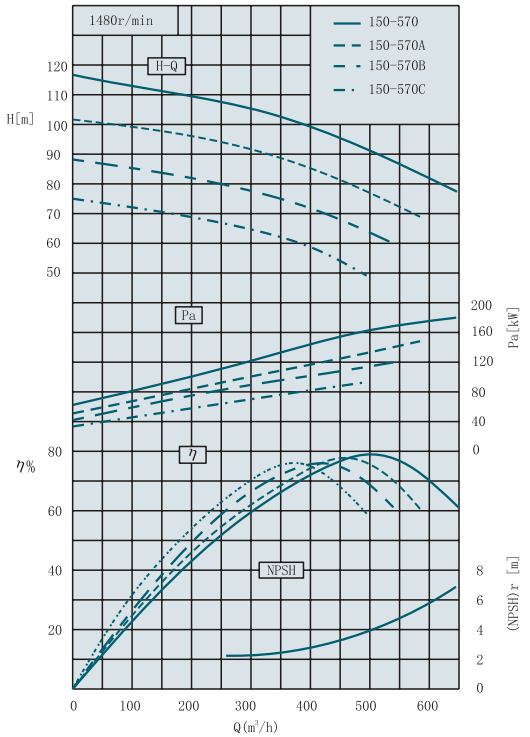

SLQS型泵性能曲线图 SLQS TYPE PUMP PERFORMANCE CURVE CHART

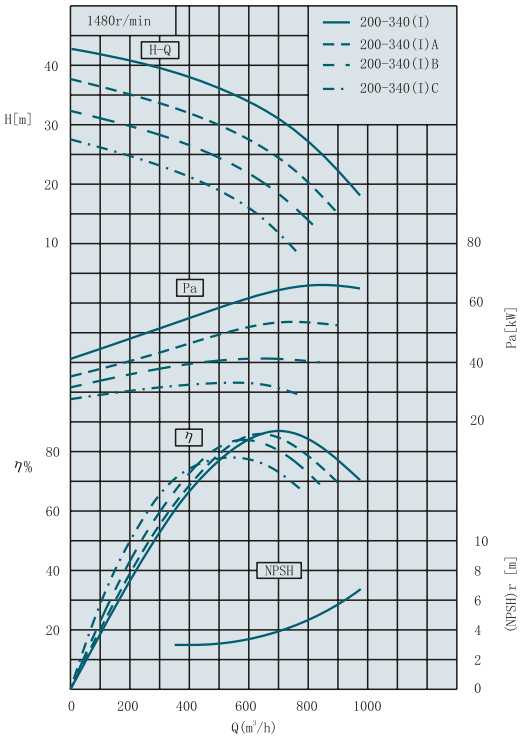

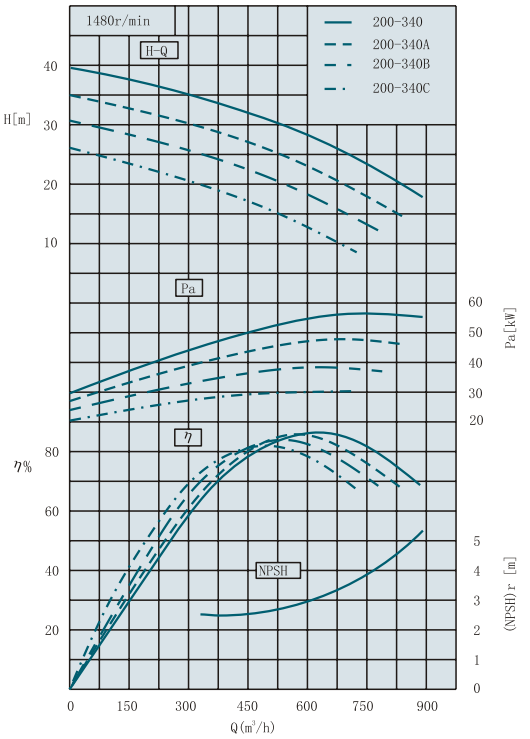

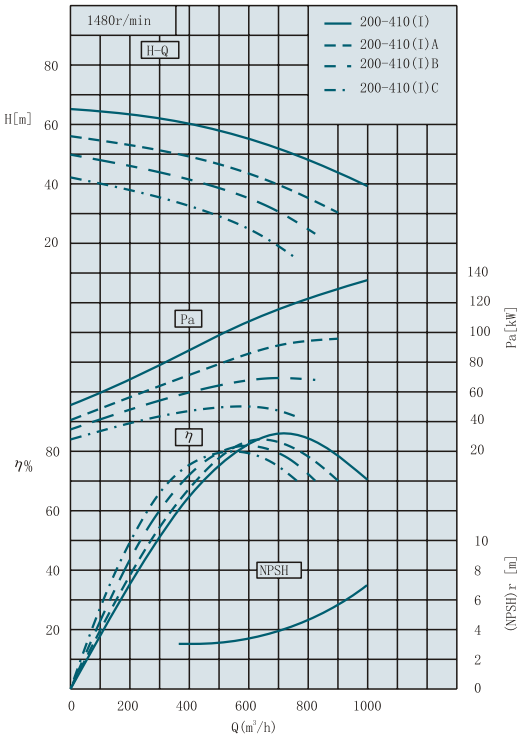

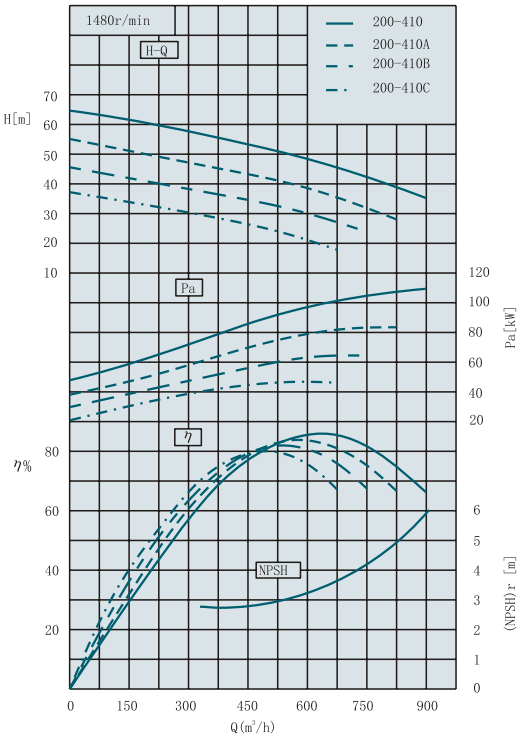

SLQS型泵性能曲线图 SLQS TYPE PUMP PERFORMANCE CURVE CHART

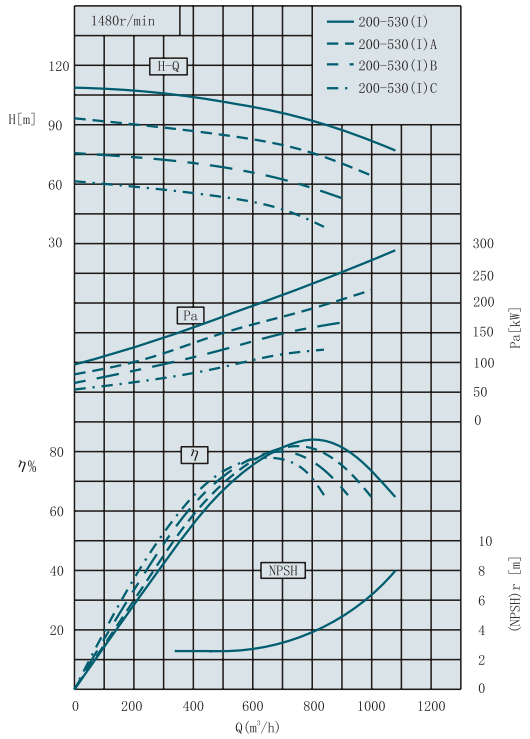

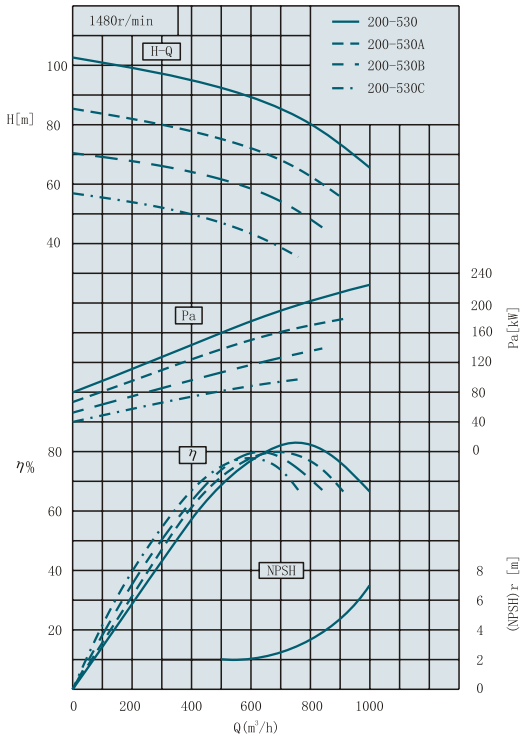

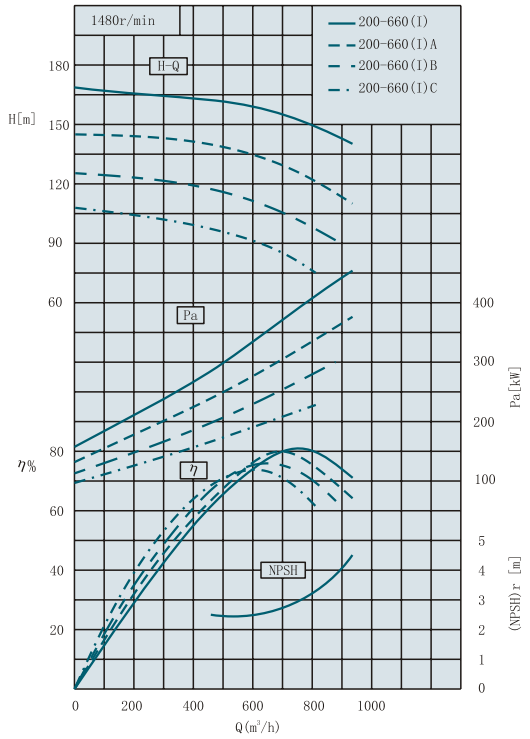

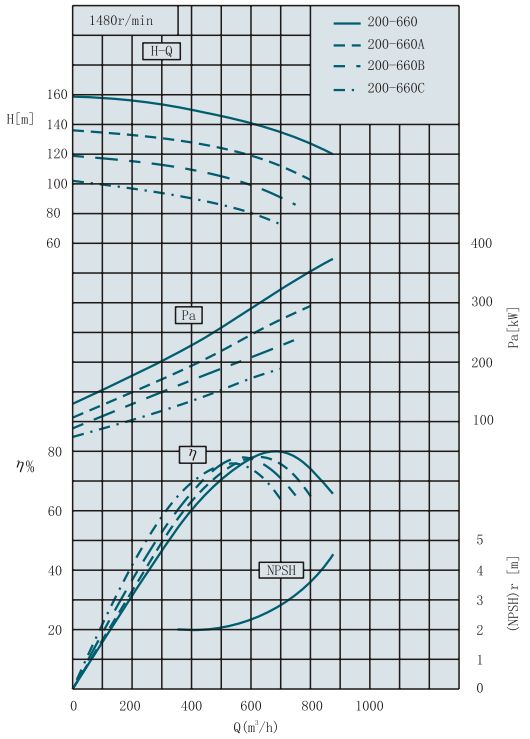

SLQS型泵性能曲线图 SLQS TYPE PUMP PERFORMANCE CURVE CHART

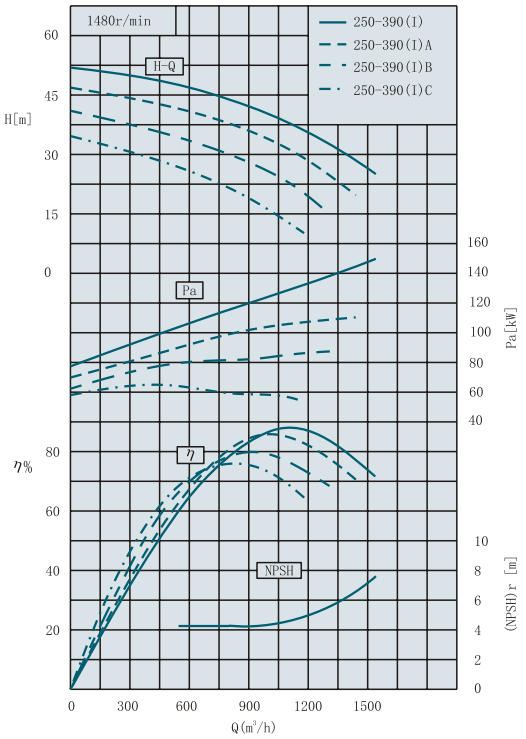

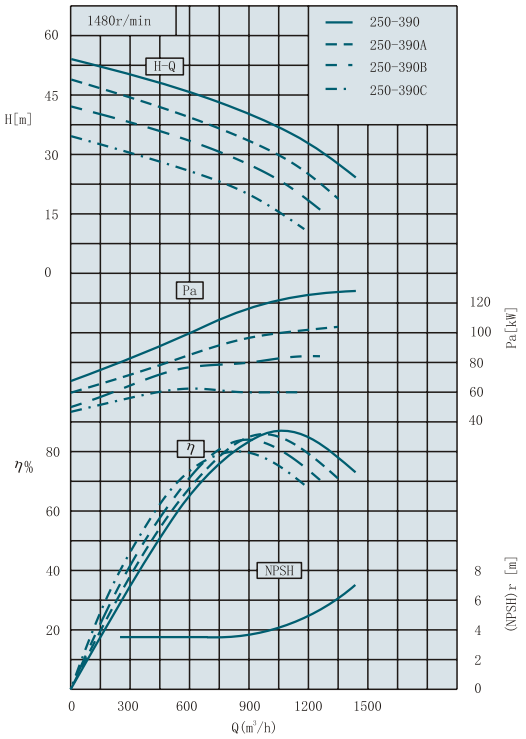

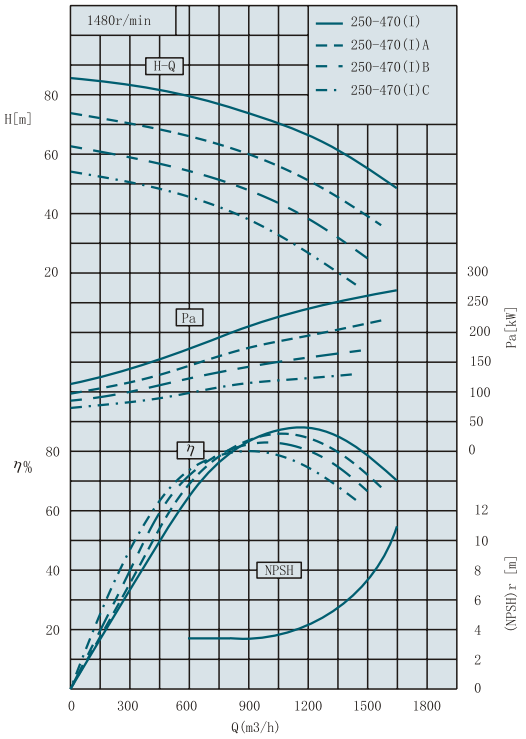

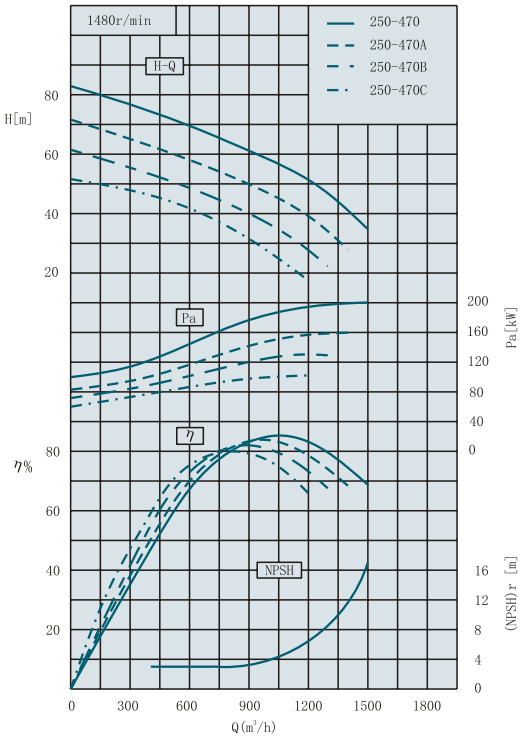

SLQS型泵性能曲线图 SLQS TYPE PUMP PERFORMANCE CURVE CHART

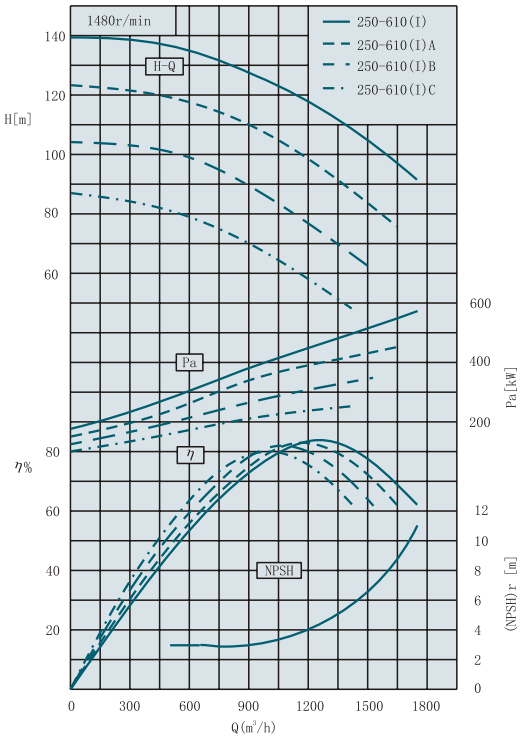

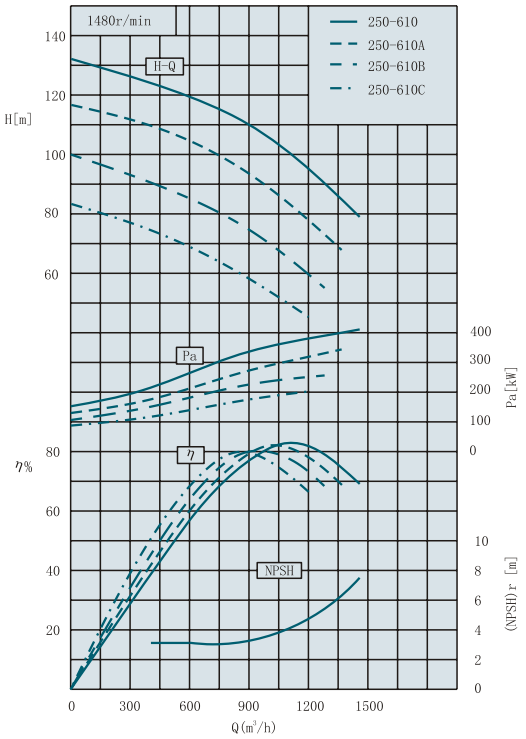

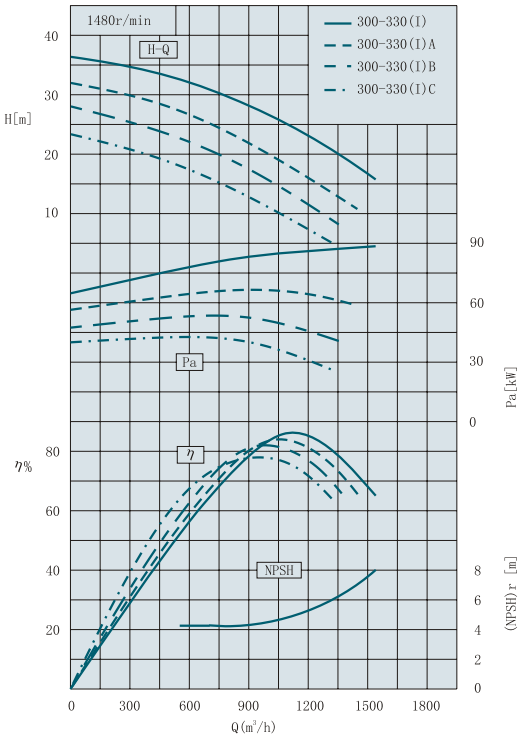

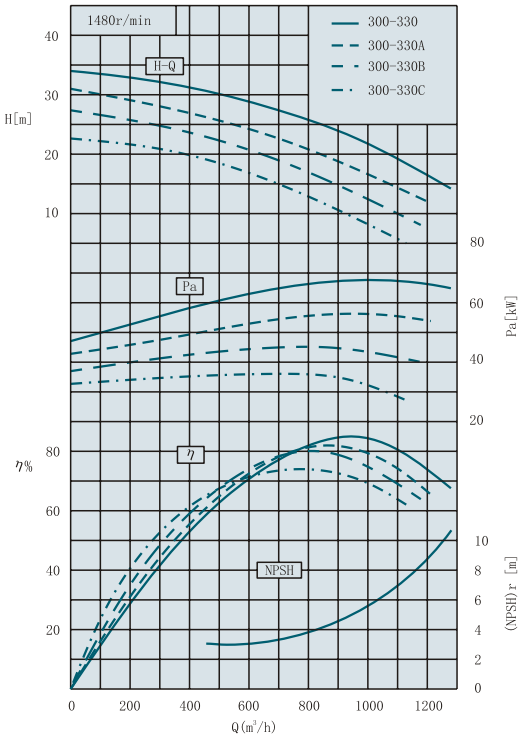

SLQS型泵性能曲线图 SLQS TYPE PUMP PERFORMANCE CURVE CHART

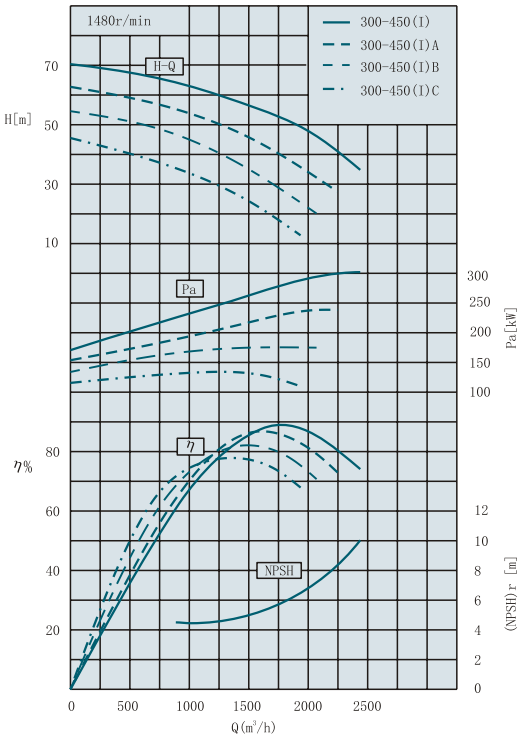

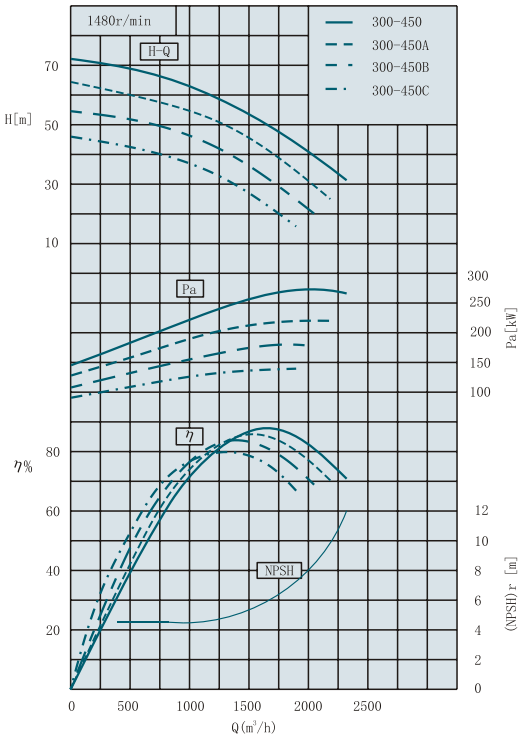

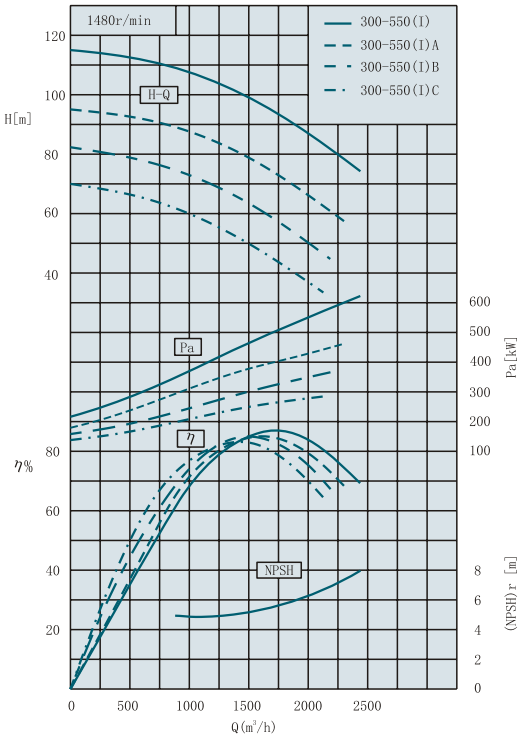

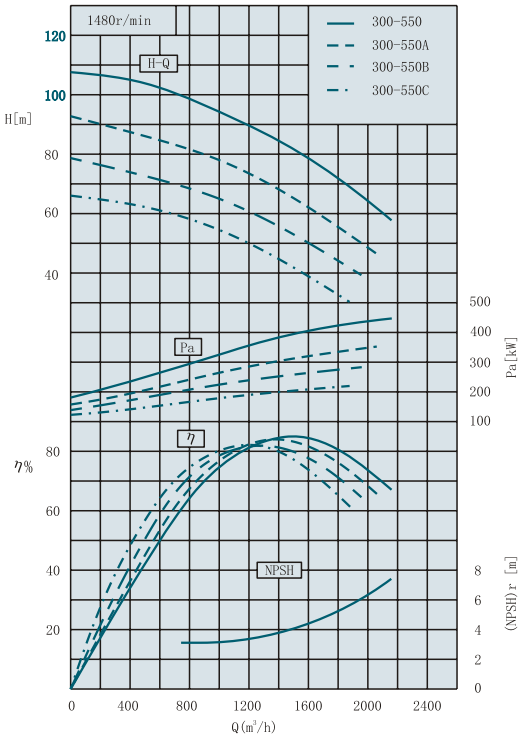

SLQS型泵性能曲线图 SLQS TYPE PUMP PERFORMANCE CURVE CHART

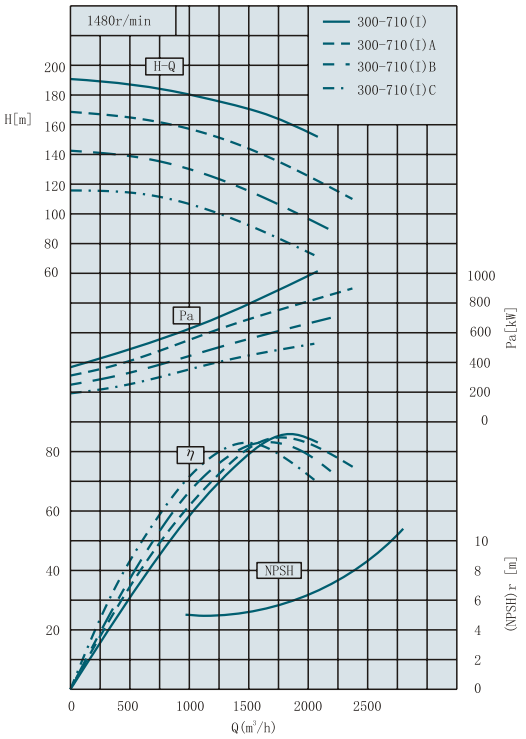

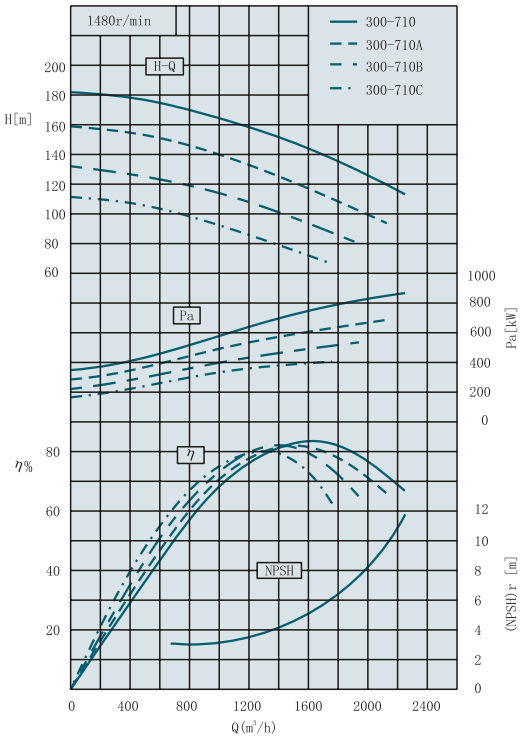

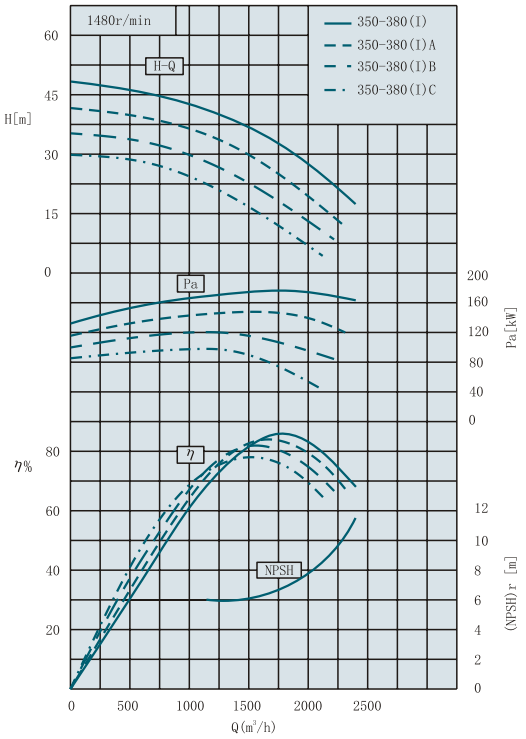

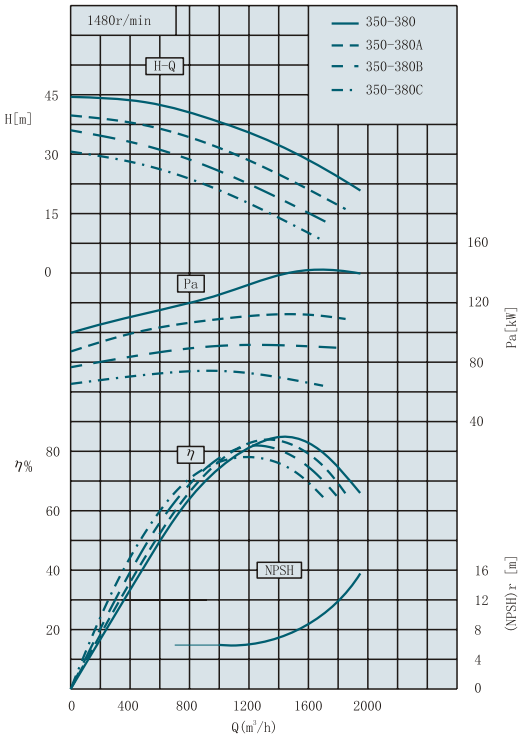

SLQS型泵性能曲线图 SLQS TYPE PUMP PERFORMANCE CURVE CHART

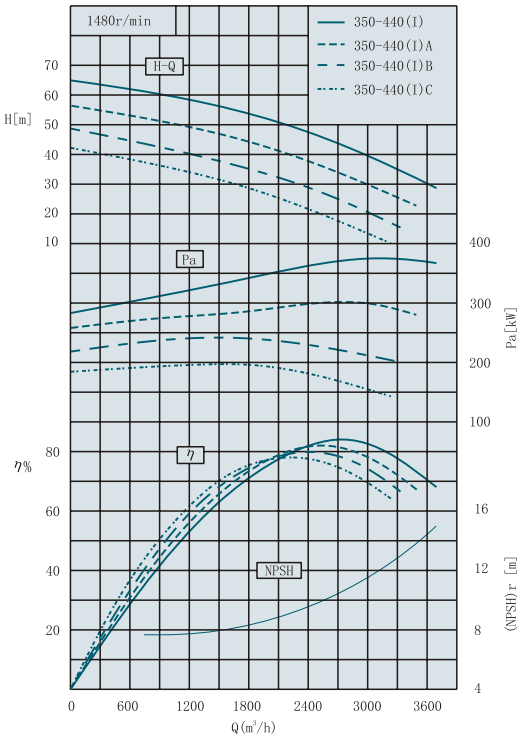

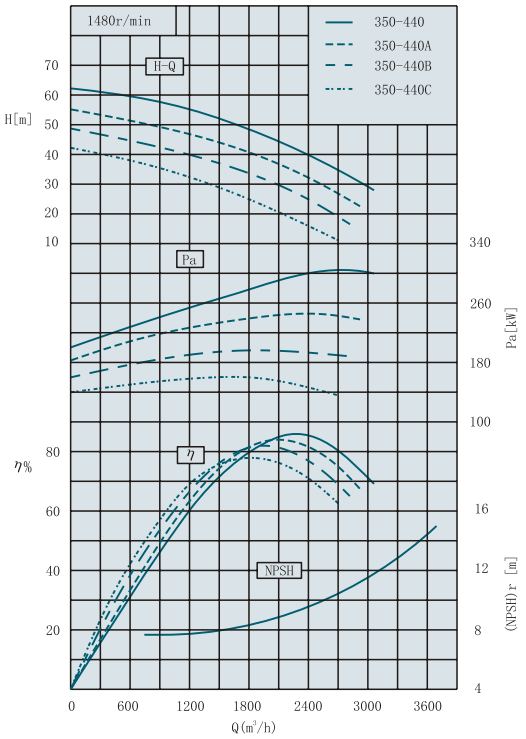

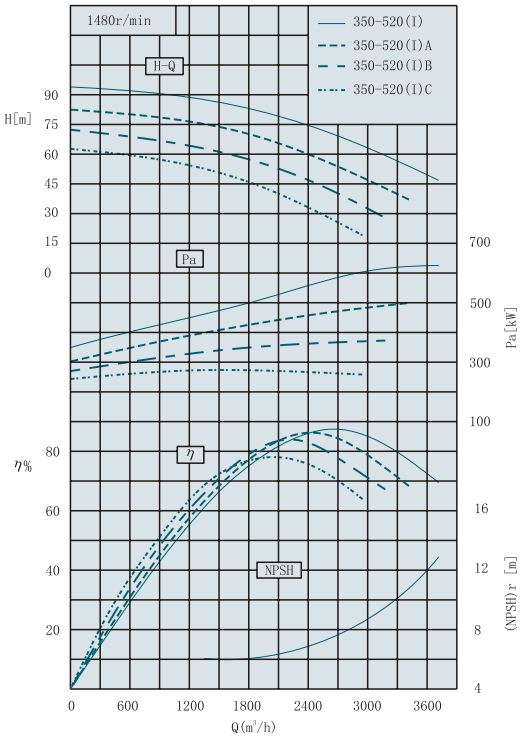

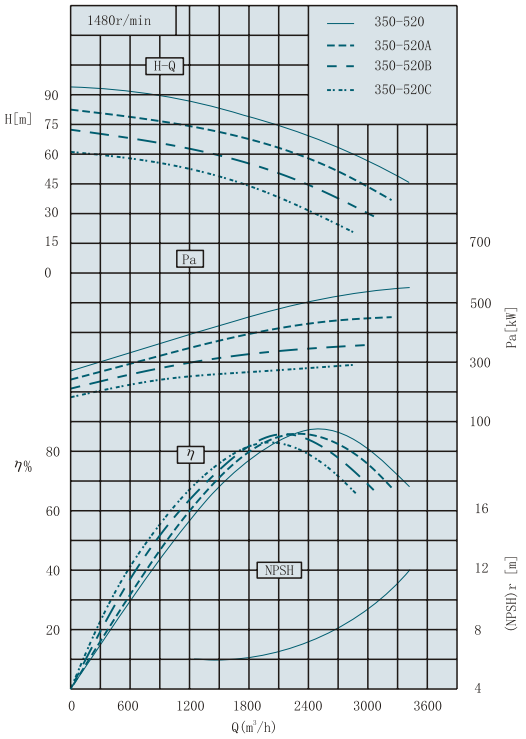

SLQS型泵性能曲线图 SLQS TYPE PUMP PERFORMANCE CURVE CHART

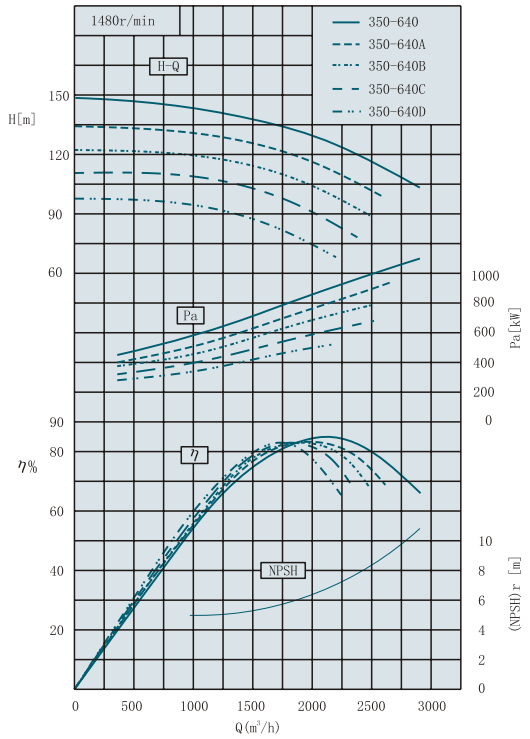

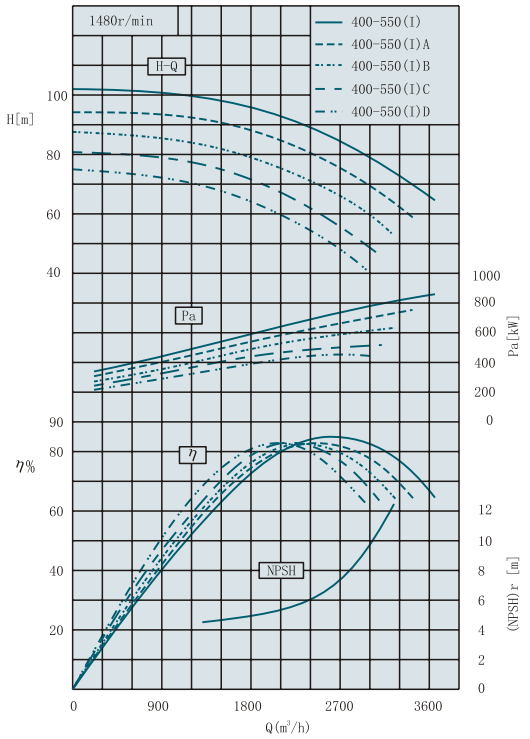

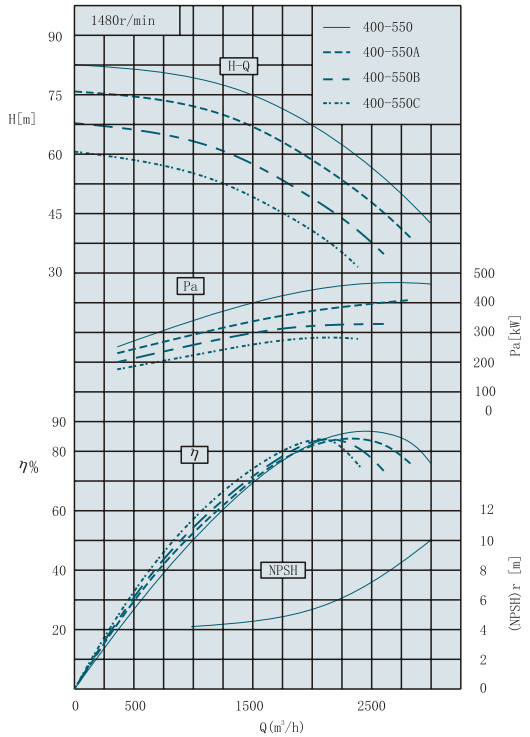

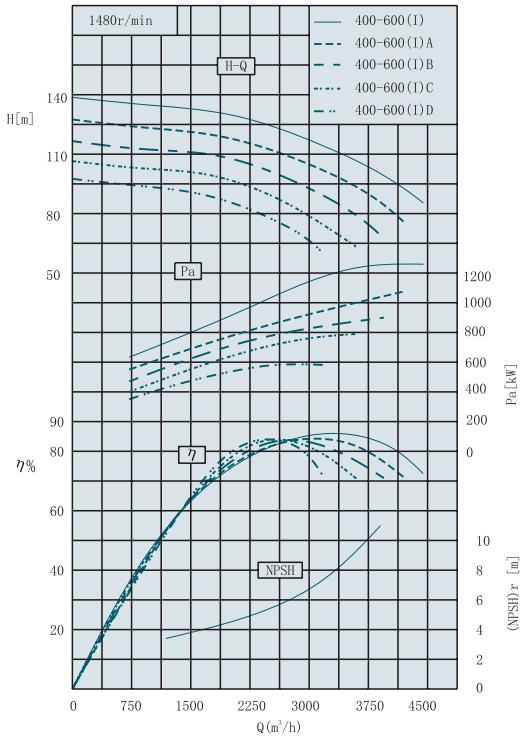

SLQS型泵性能曲线图 SLQS TYPE PUMP PERFORMANCE CURVE CHART

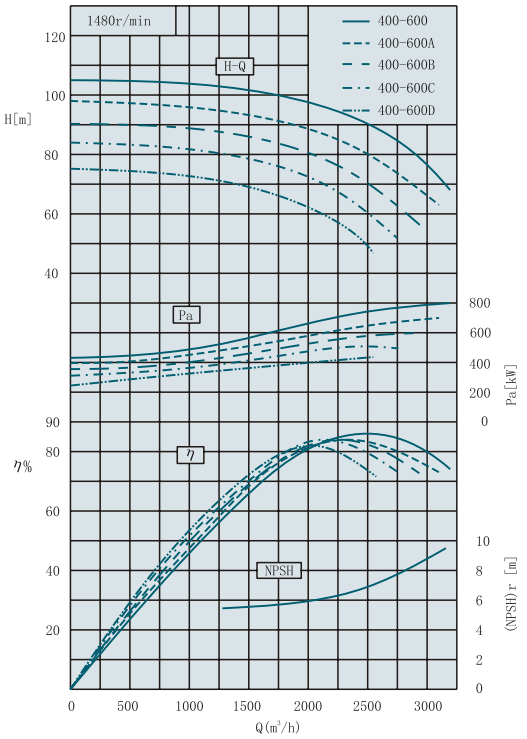

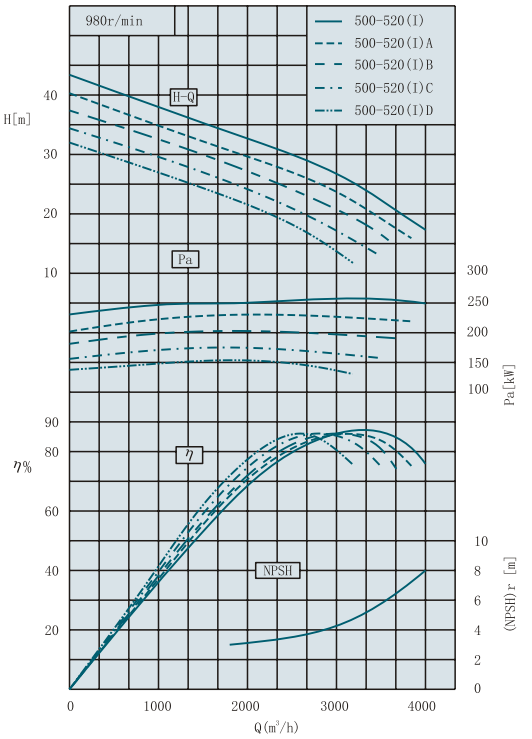

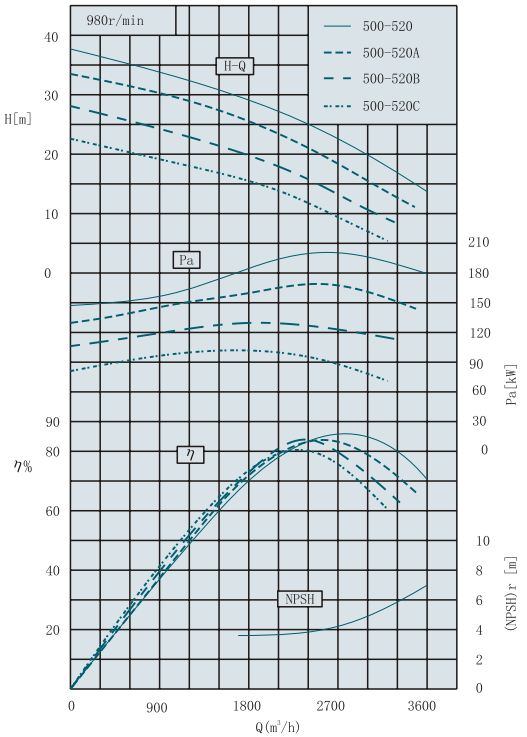

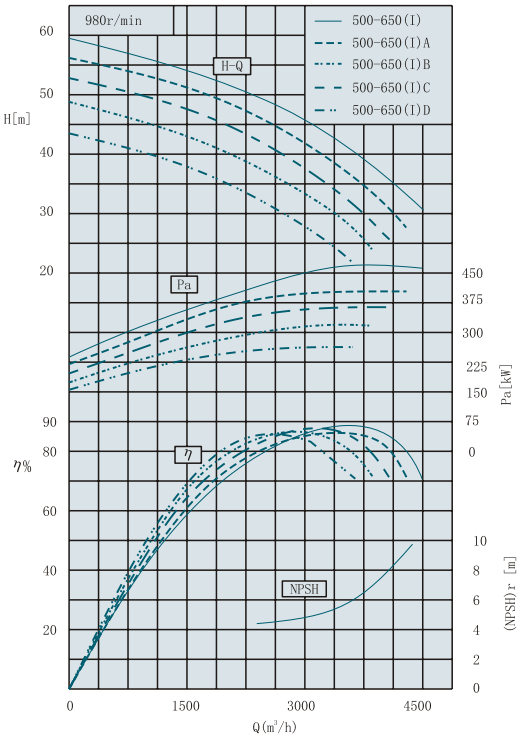

SLQS型泵性能曲线图 SLQS TYPE PUMP PERFORMANCE CURVE CHART

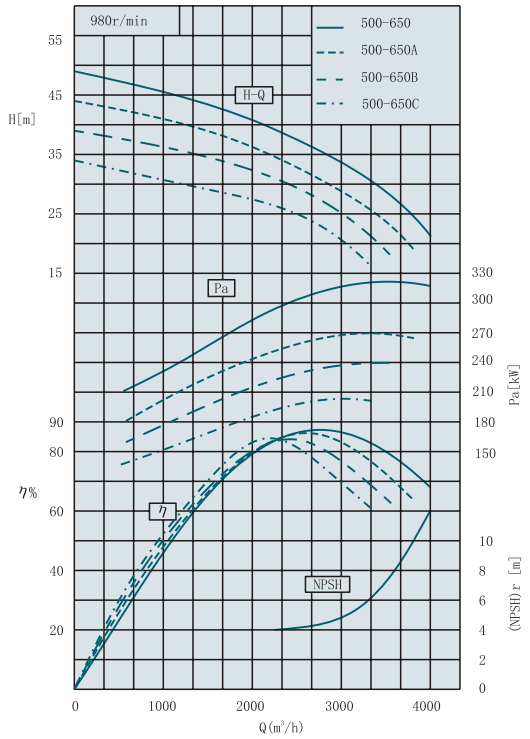

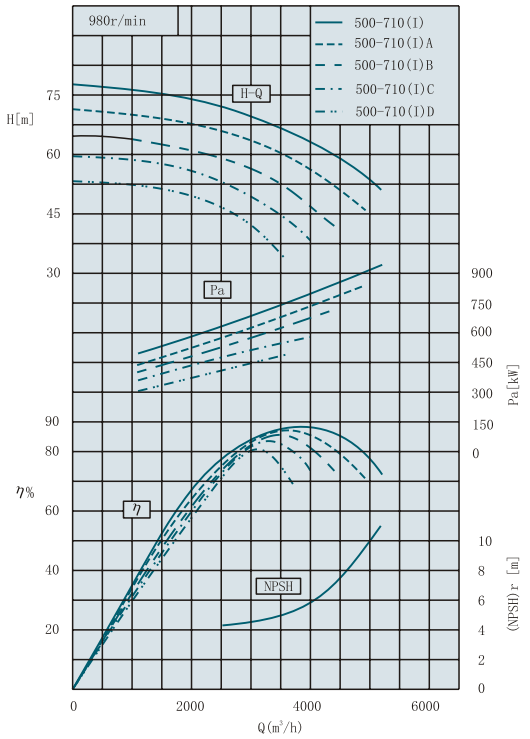

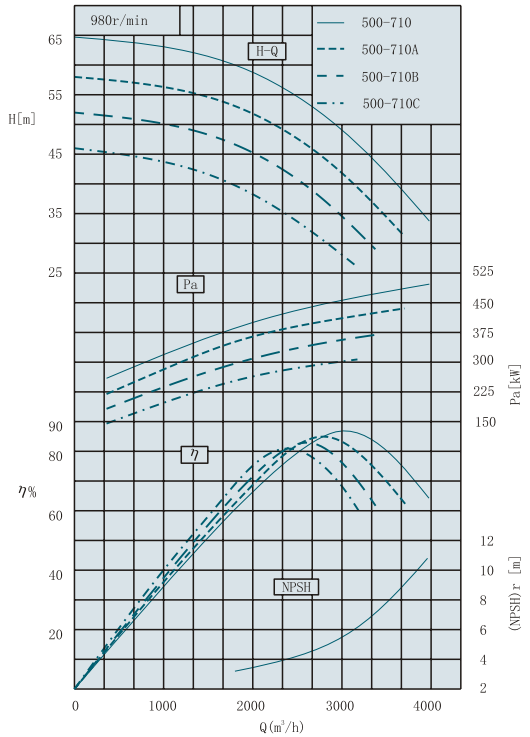

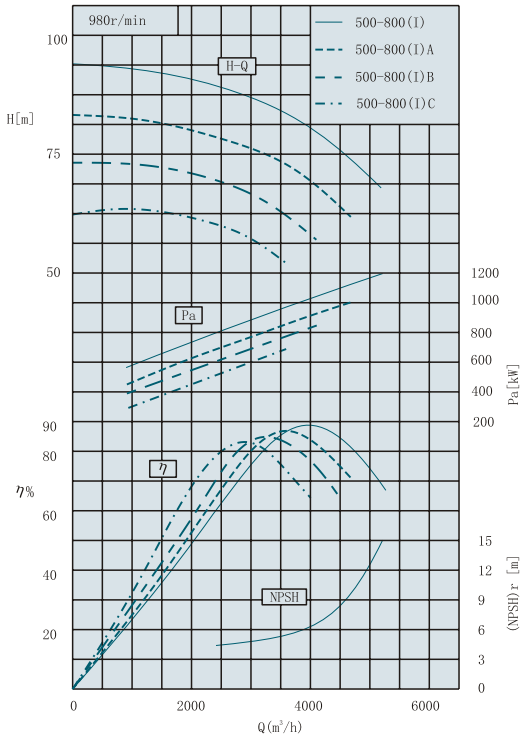

SLQS型泵性能曲线图 SLQS TYPE PUMP PERFORMANCE CURVE CHART

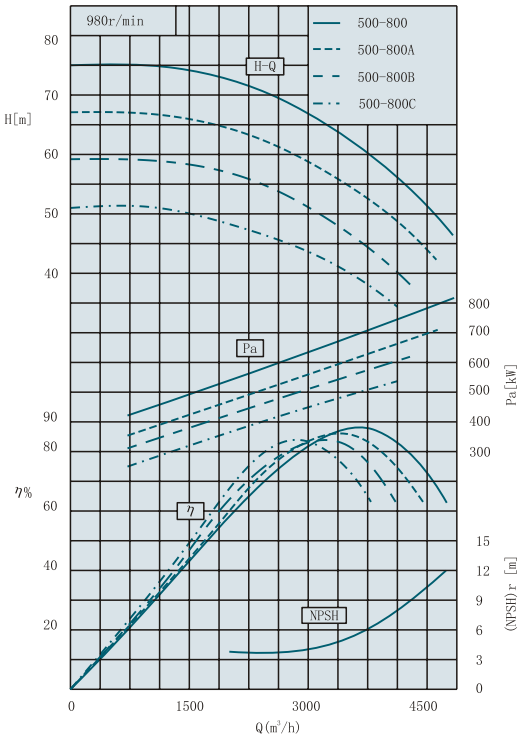

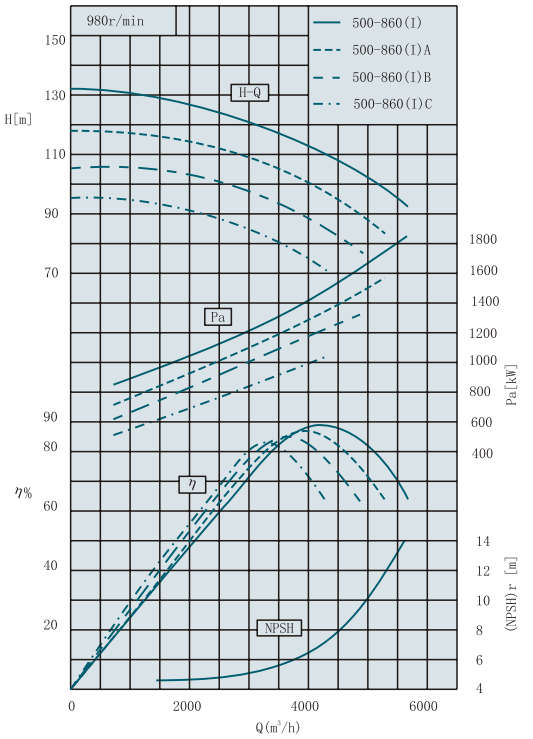

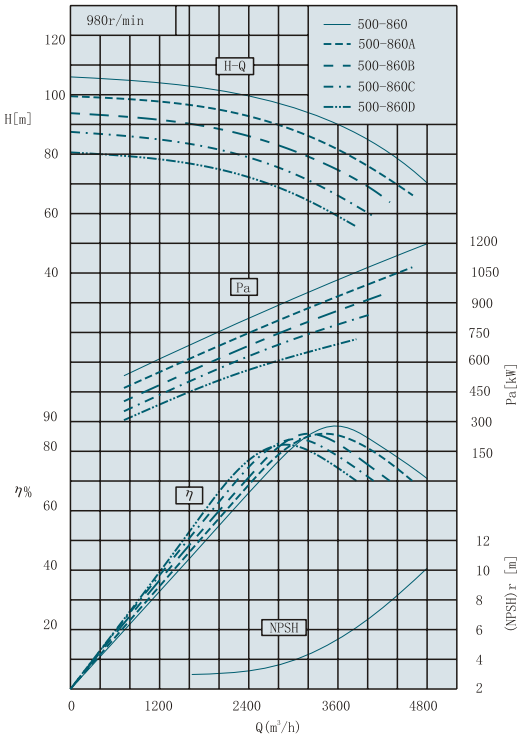

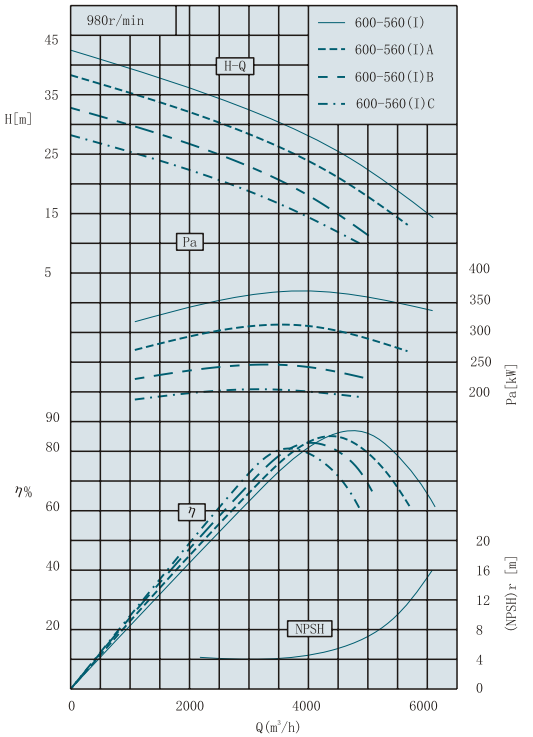

SLQS型泵性能曲线图 SLQS TYPE PUMP PERFORMANCE CURVE CHART

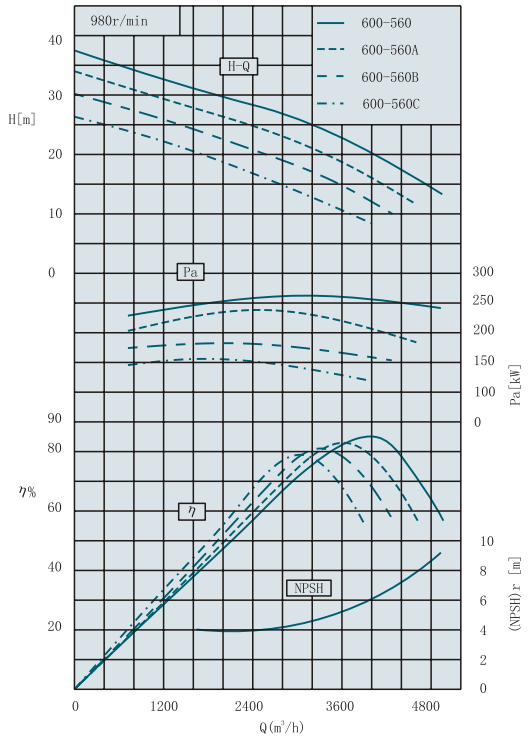

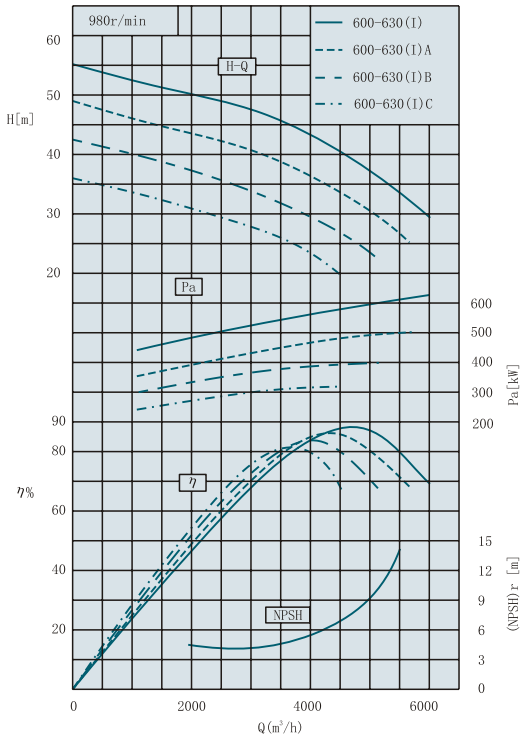

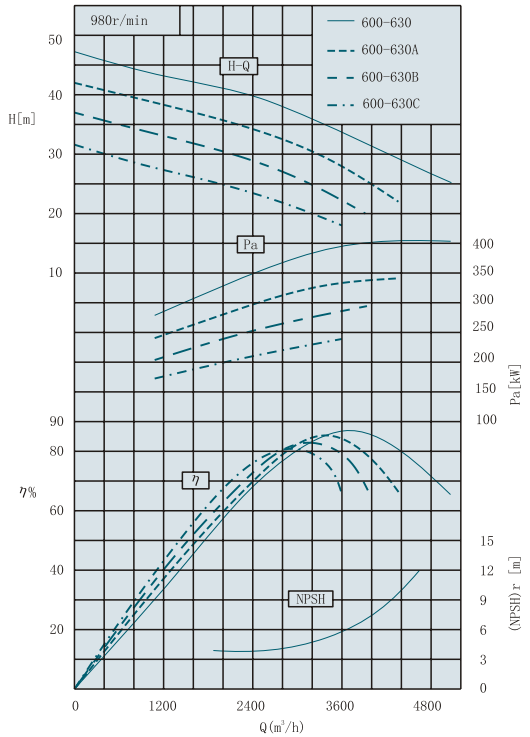

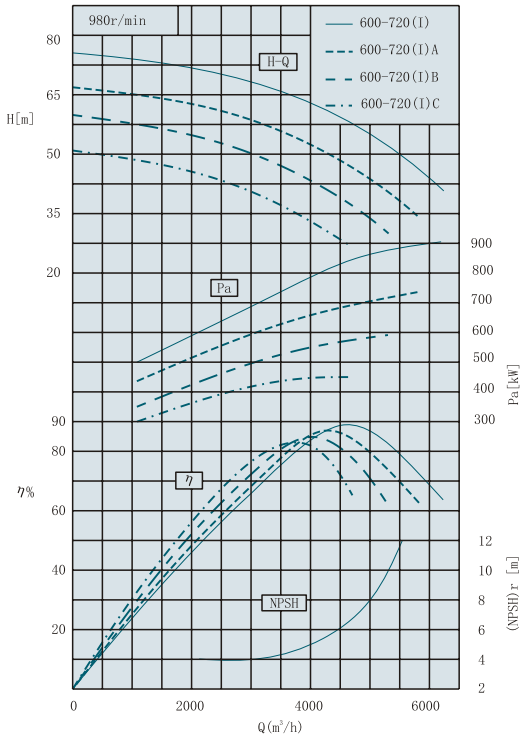

SLQS型泵性能曲线图 SLQS TYPE PUMP PERFORMANCE CURVE CHART

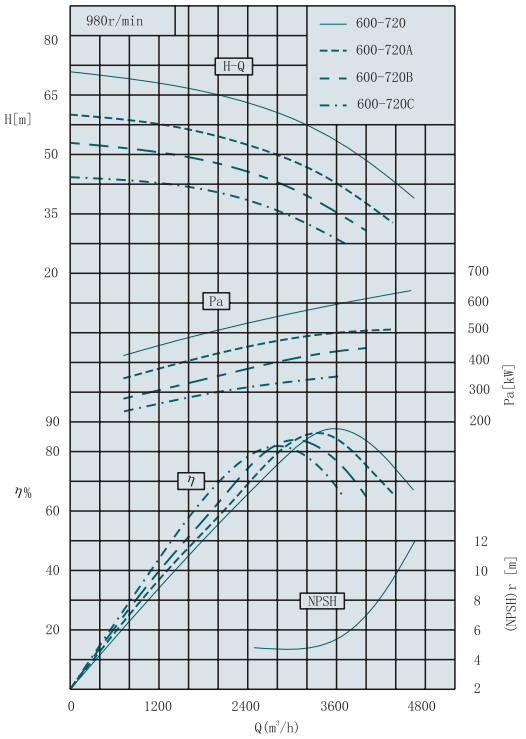

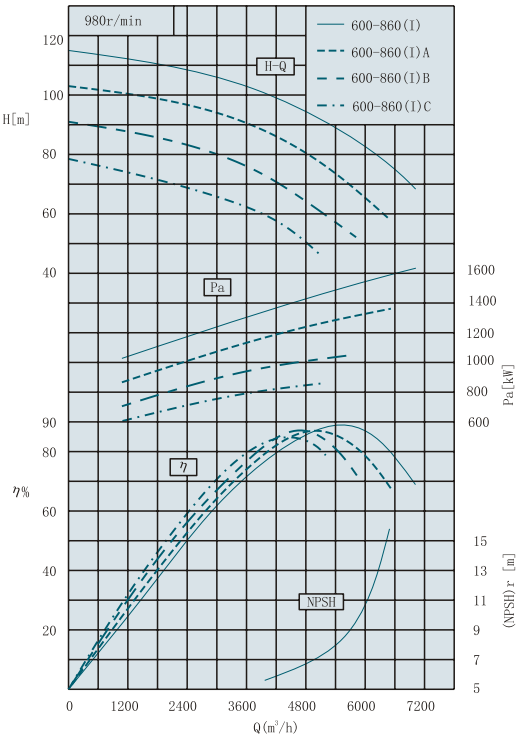

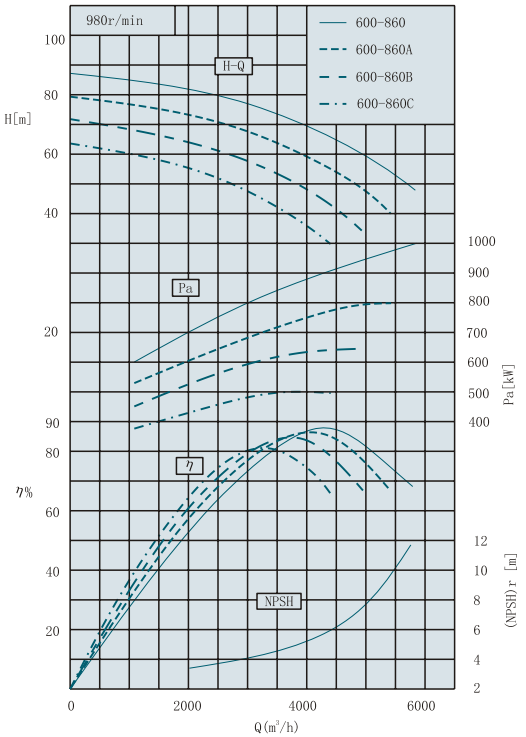

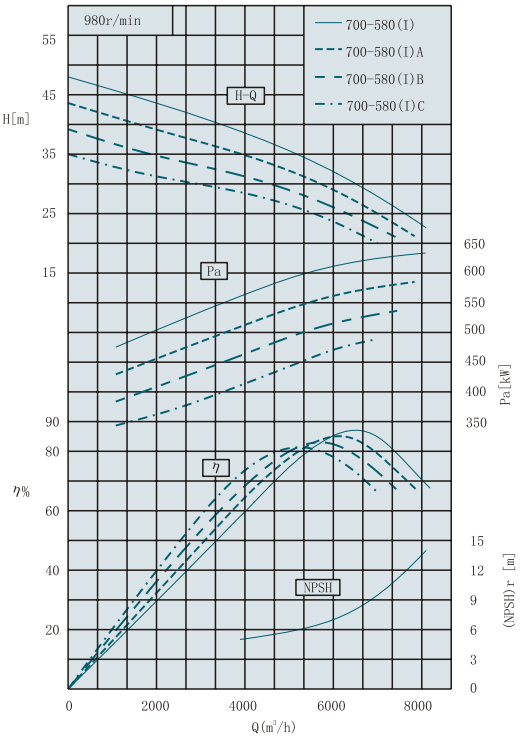

SLQS型泵性能曲线图 SLQS TYPE PUMP PERFORMANCE CURVE CHART

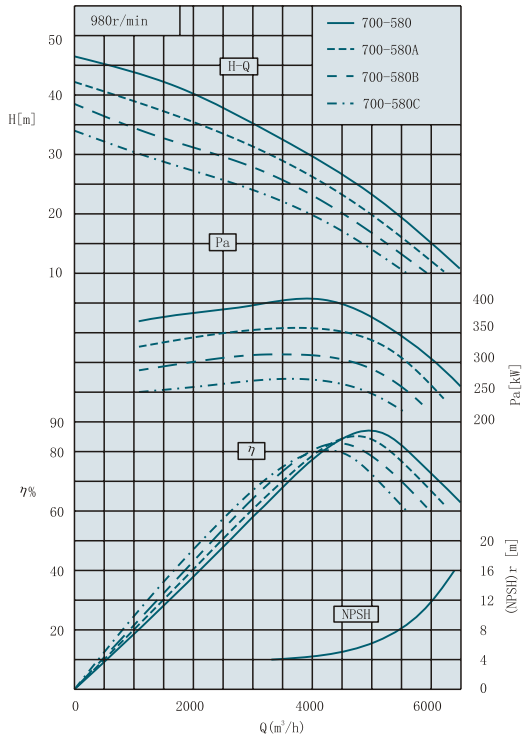

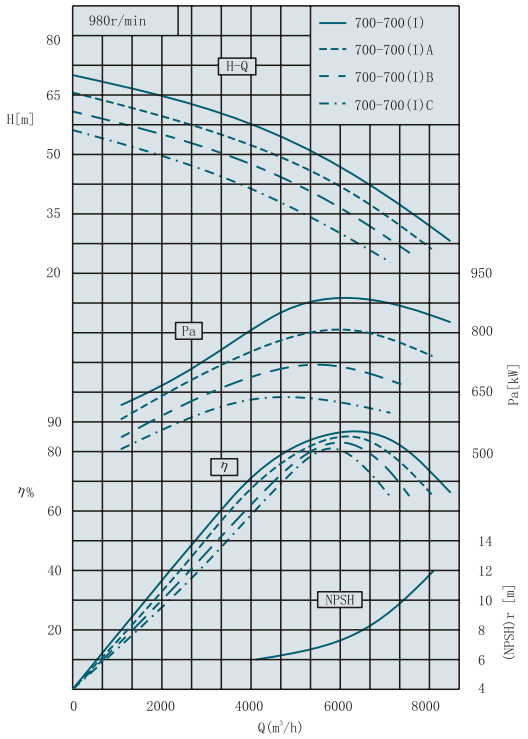

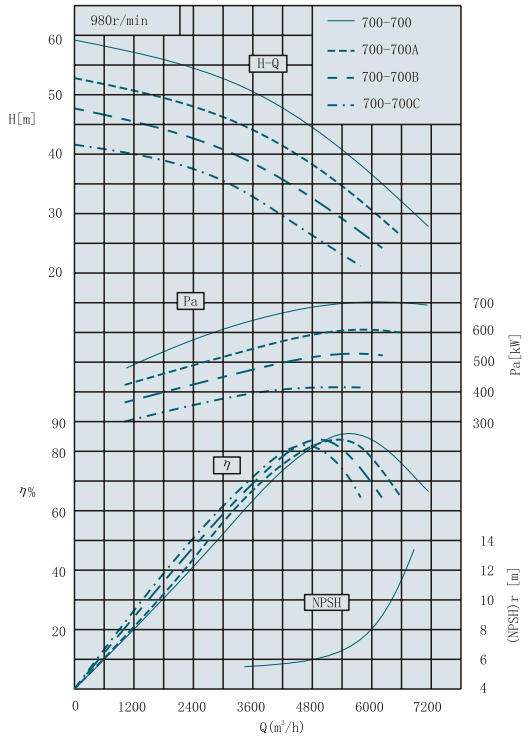

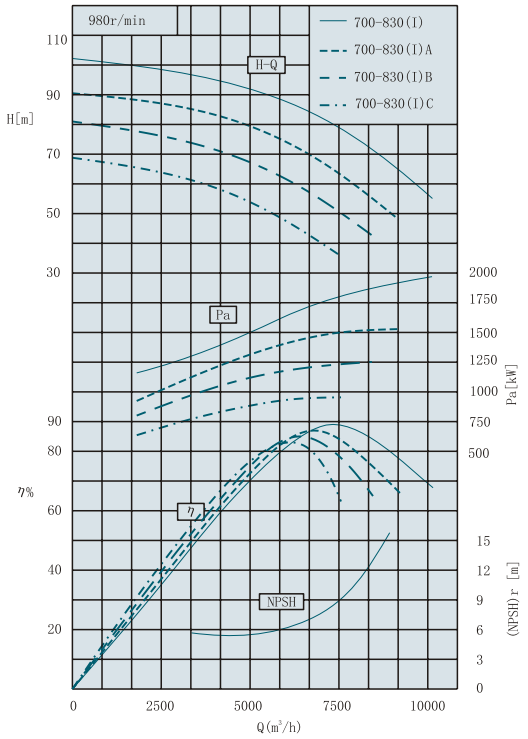

SLQS型泵性能曲线图 SLQS TYPE PUMP PERFORMANCE CURVE CHART

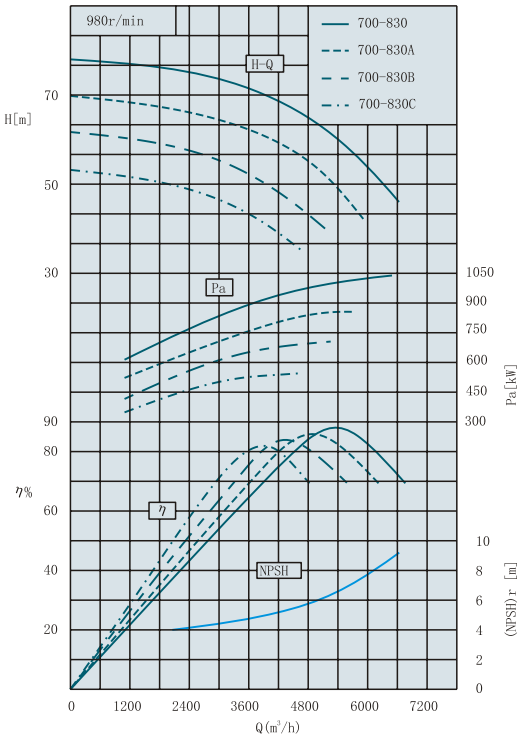

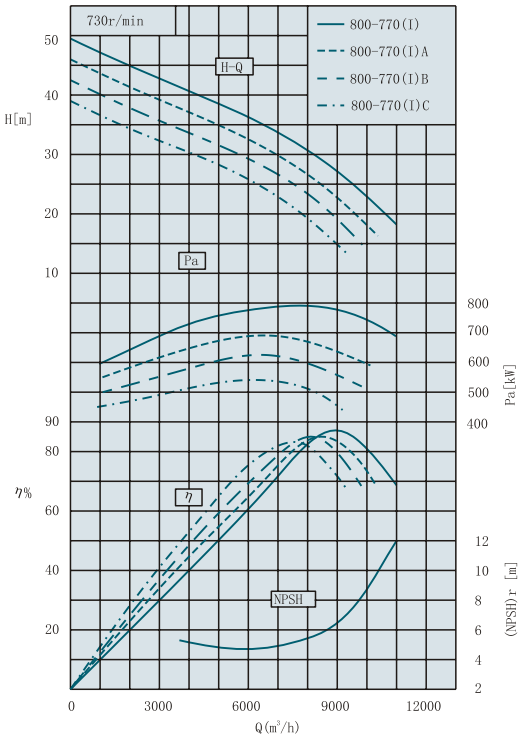

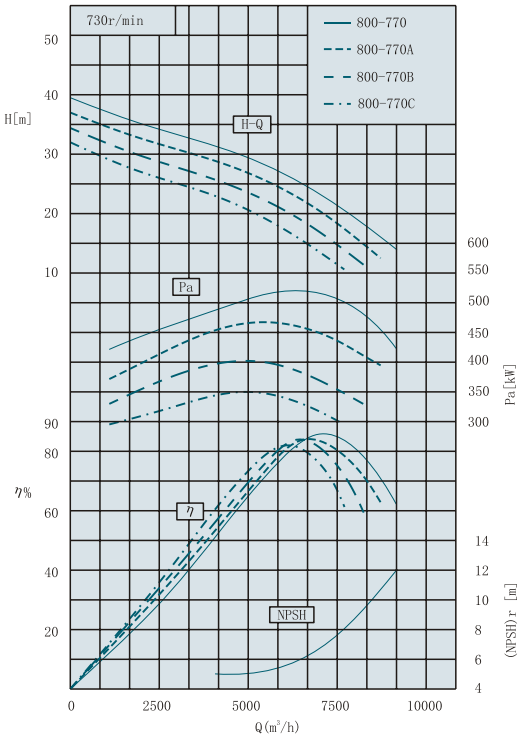

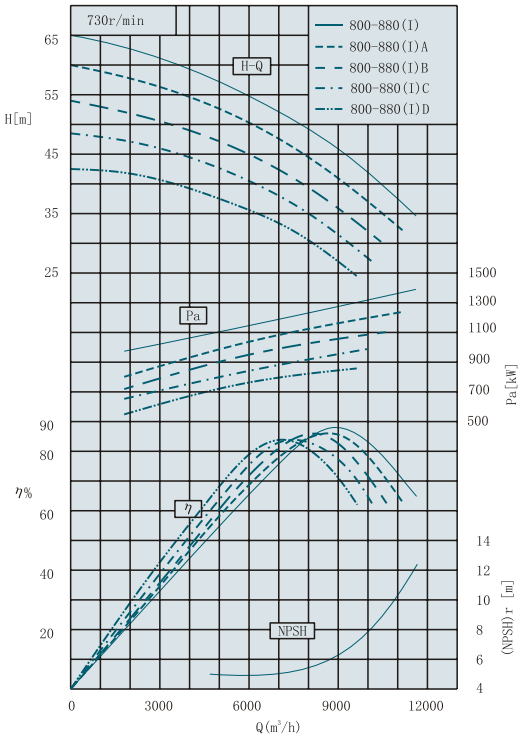

SLQS型泵性能曲线图 SLQS TYPE PUMP PERFORMANCE CURVE CHART

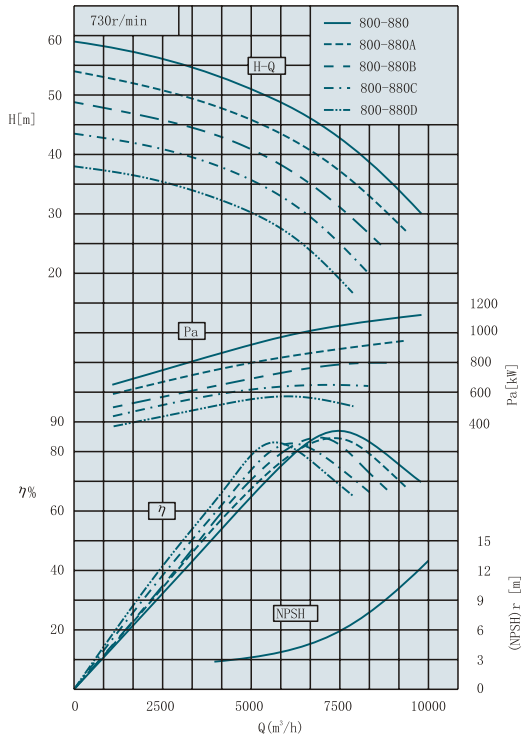

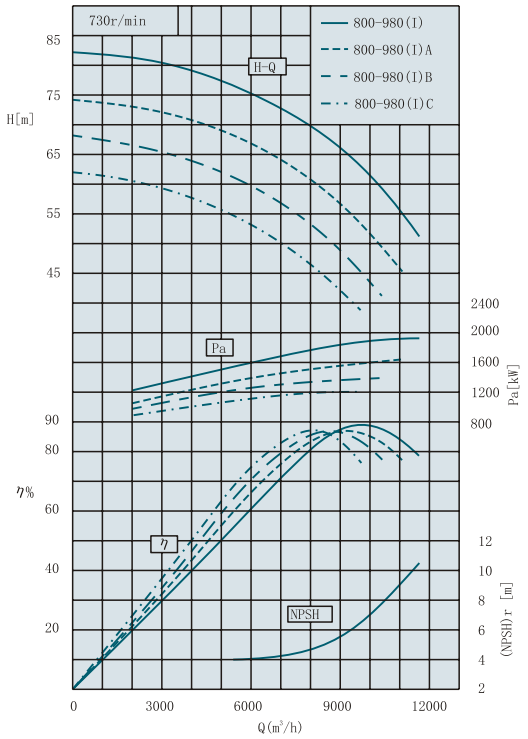

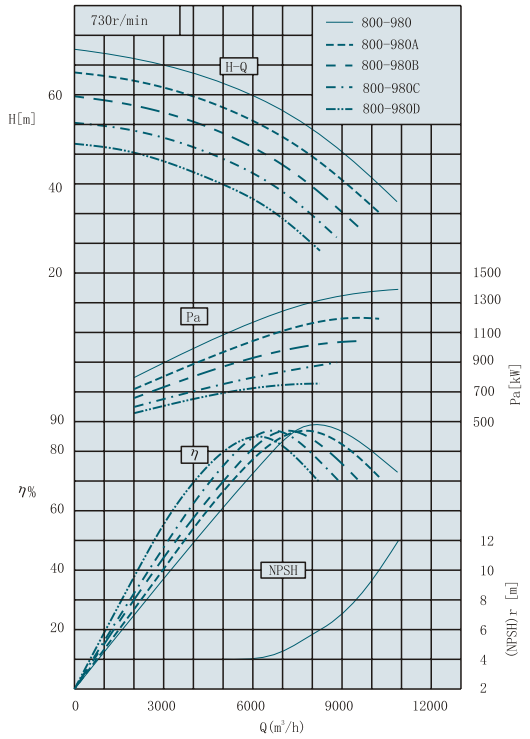

SLQS型卧式泵安装形式 SLQS TYPE HORIZONTAL PUMP INSTALLATION MODEL

A 80-220至350-640

K向（逆时针）

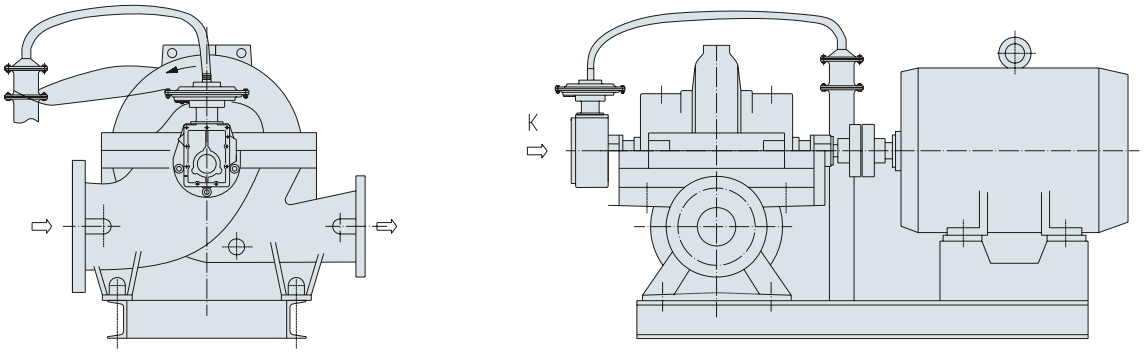

泵和电机都安装在底座上，单空气室结构

B 80-220至350-640

K向（逆时针）

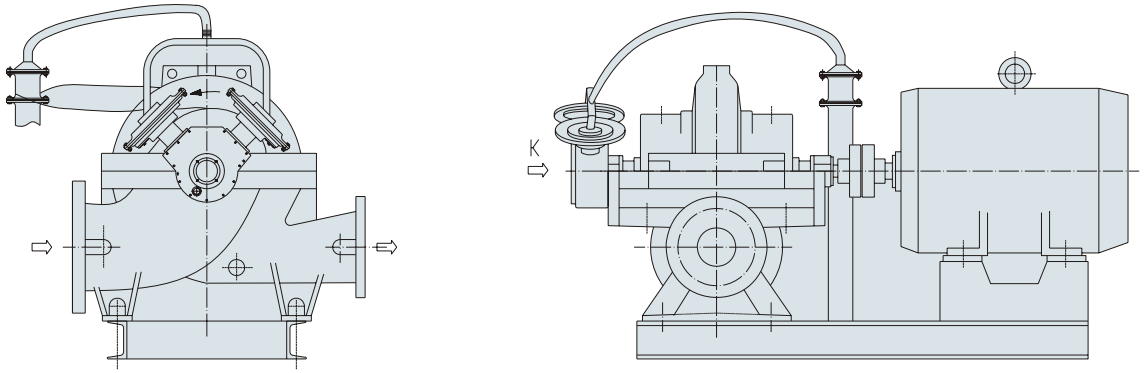

泵和电机都安装在底座上，双空气室结构

C 400-550至800-980

K向（逆时针）

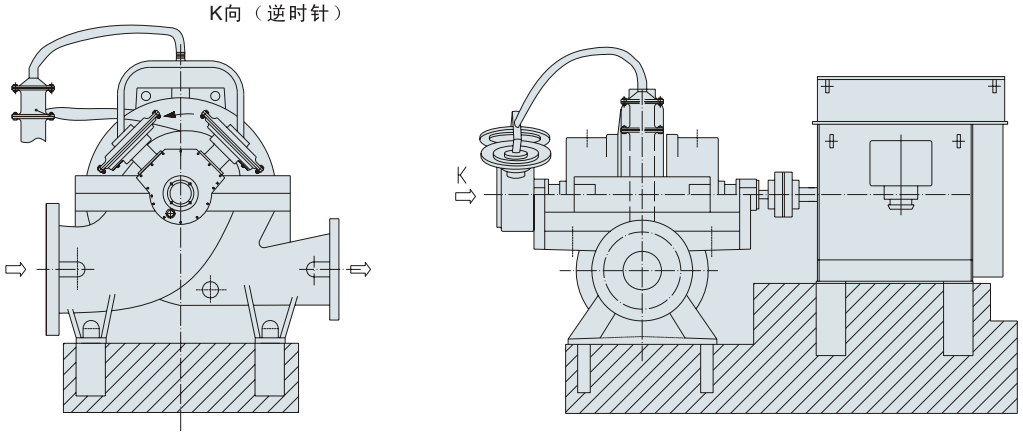

泵和电机都安装在基础上，双空气室结构

转向/流向 ROTATING DIRECDTION/FLOWING DIRECTION

卧 式 Horizontally

从传动端看逆时针方向旋转
It moves CCW viewing from the actuation end

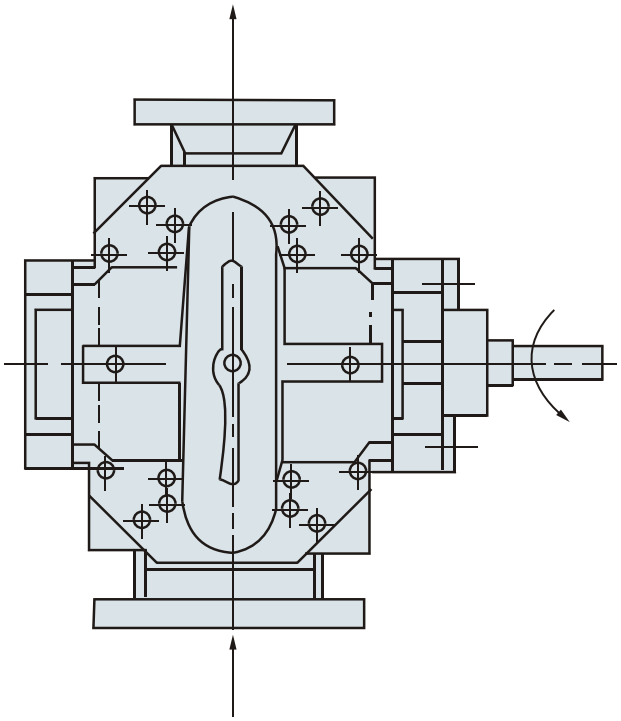

从传动端看顺时针方向旋转
It moves CW viewing from the actuation end

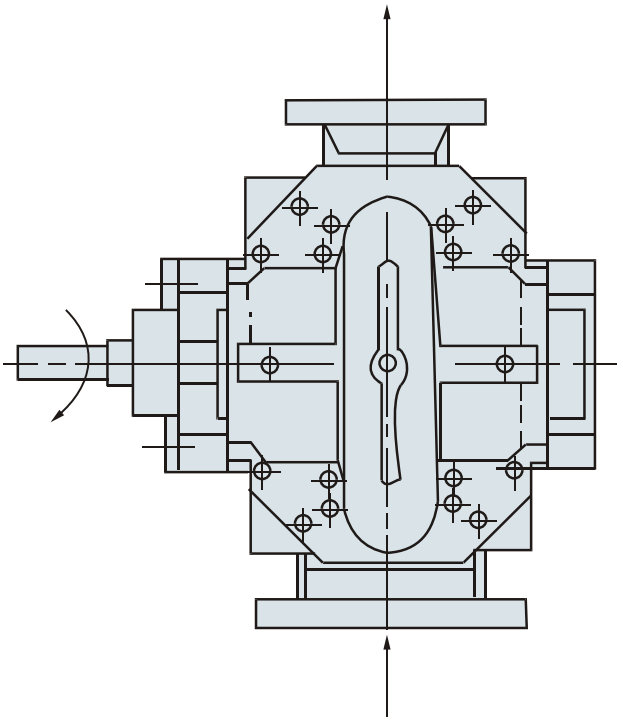

SLQS型连接法兰尺寸 SLQS TYPE CONJUNCTION FLANGE DIMENSION

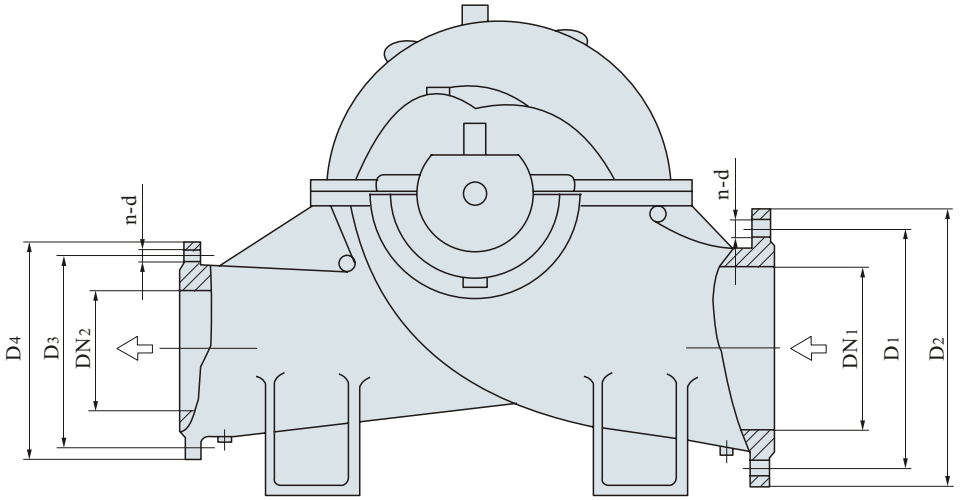

泵型号 Pump type	进口通径 Inlet diameter	进口法兰尺寸 Inlet flange dimension			出口通径 Outlet diameter	出口法兰尺寸 Outlet flange dimension		
	DN_1	D_1	D_2	n-d	DN_2	D_3	D_4	n-d
80-220	125	210	250	8-17.5	80	160	200	8-17.5
80-280								
80-350								
100-260	150	240	285	8-22	100	180	220	8-17.5
100-320								
100-400								
125-240	200	295	340	12-22	125	210	250	8-17.5
125-300								
125-380								
125-480								
150-280	200	295	340	12-22	150	240	285	8-22
150-350								
150-450								
150-570								

SLQS型连接法兰尺寸 SLQS TYPE CONJUNCTION FLANGE DIMENSION

泵型号 Pump type	进口通径 Inlet diameter	进口法兰尺寸 Inlet flange dimension			出口通径 Outlet diameter	出口法兰尺寸 Outlet flange dimension		
	DN1	D1	D2	n-d	DN2	D3	D4	n-d
200-340	250	355	405	12-26	200	295	340	12-22
200-410								
200-530								
200-660						310	360	12-26
250-390	300	410	460	12-26	250	355	405	12-26
250-470								
250-610								
300-330	350	470	520	16-26	300	410	460	12-26
300-450	400	525	580	16-30				
300-550								
300-710						430	485	16-30
350-380	400	525	580	16-30	350	470	520	16-26
350-440								
350-520								
350-640								
400-550	500	650	715	20-33	400	525	580	16-30
400-600								
500-520	600	770	840	20-36	500	650	715	20-33
500-650								
500-710								
500-800								
500-860								
600-560	700	840	910	24-36	600	770	840	20-36
600-630								
600-720								
600-860								
700-580	800	950	1025	24-39	700	840	910	24-36
700-700								
700-830								
800-770	900	1050	1125	28-39	800	950	1025	24-39
800-880								
800-980								

SLQS型泵安装尺寸 SLQS TYPE PUMP INSTALLATION DIMENSION

80-220至80-350(见结构图1或2)安装尺寸 (See structural drawing 1 or 2) installation dimension

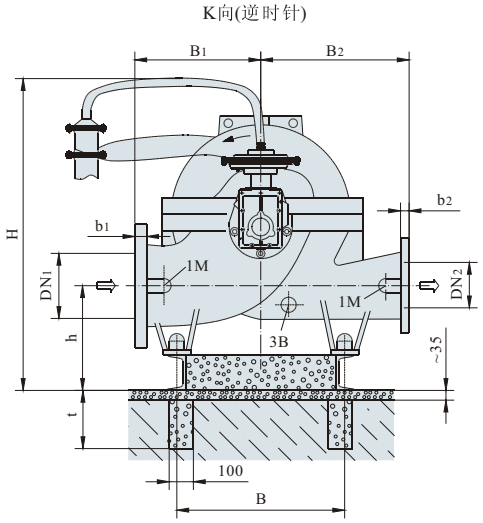

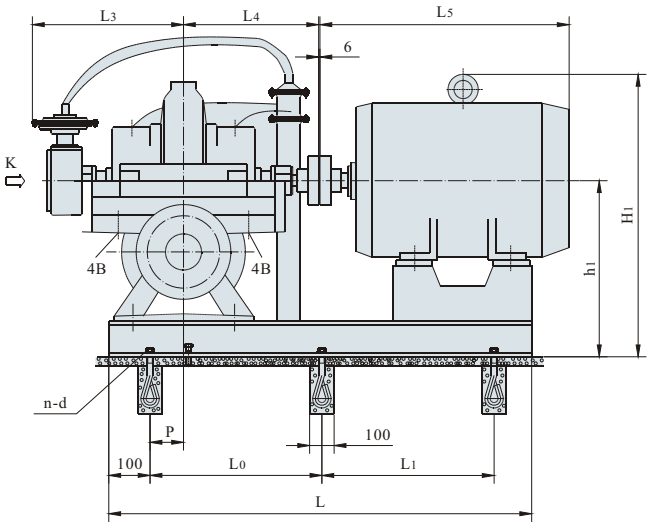

连接螺纹尺寸
Connecting thread size

1M	压力表 Piexometer	R 1/2
3B	排水孔 Drainage hole	R 1/2
4B	漏液排出孔 Drainage hole for leaked liquid	R 3/4

主要外形尺寸 EXTERNAL DIMENSION

泵型号 Pump type	法兰尺寸 Flange dimension (mm)				泵尺寸 Pump dimension (mm)					重量 Weight (kg)	
	DN_1	DN_2	b_1	b_2	B_1	B_2	L_4	H≤	L_3	泵 Pump	含水量 Water content
80-220	125	80	26	24	300	300	415	1100	600	175	10
80-280										194	15
80-350					330	330				204	20

电机尺寸－Y型电机 MOTOR DIMENSION-Y TYPE MOTOR

电机极数 Motor pole	泵型号 Pump type	电机型号 Motor type	电机功率 Motor power (kW)	B	h	h_1	H_1	L	L_0	L_1	t	P	L_5	n-d	电机重量 Motor weight (kg)	底座参考重量 Foundation reference weight (kg)
4极(Pole)	80-220	100L	2.2-3	340	295	435	580	880	340		350	70	380	6-M16×300	39	70
		112M	4				588	890	345				400		45	
		132S	5.5				618	930	365				475		72	80
	80-280	132M	7.5					970	385				515		84	
		160M	11				660	1050	425				605		130	
		160L	15					1100	450				650		145	
	80-350	180M	18.5					1110	455				670		180	110
		180L	22				660	1150	475				710		200	

SLQS型泵安装尺寸 SLQS TYPE PUMP INSTALLATION DIMENSION

100-260至100-400(见结构图1或2)安装尺寸 (See structural drawing 1 or 2) installation dimension

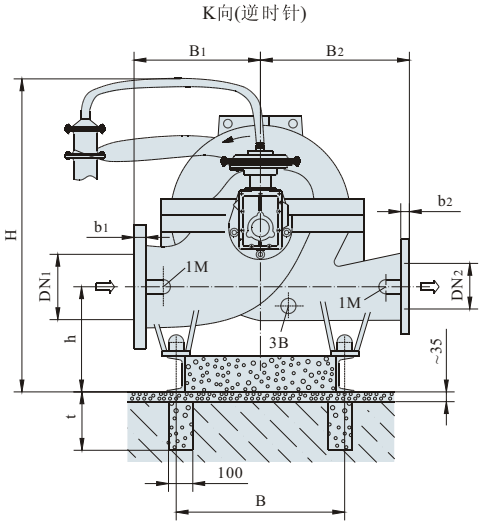

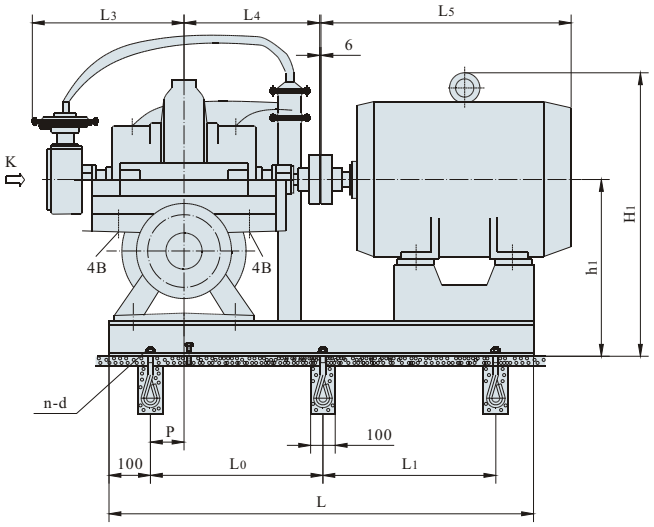

连接螺纹尺寸
Connecting thread size

1M	压力表 Piexometer	R 1/2
3B	排水孔 Drainage hole	R 1/2
4B	漏液排出孔 Drainage hole for leaked liquid	R 3/4

主要外形尺寸 EXTERNAL DIMENSION

泵型号 Pump type	法兰尺寸 Flange dimension (mm)				泵尺寸 Pump dimension (mm)					重量 Weight (kg)	
	DN_1	DN_2	b_1	b_2	B_1	B_2	L_4	H≤	L_3	泵 Pump	含水量 Water content
100-260	150	100	28	24	330	330	415	1150	600	207	20
100-320										305	25
100-400					370	370				325	30

电机尺寸－Y型电机 MOTOR DIMENSION-Y TYPE MOTOR

电机极数 Motor pole	泵型号 Pump type	电机型号 Motor type	电机功率 Motor power (kW)	B	h	h_1	H_1	L	L_0	L_1	t	P	L_5	n-d	电机重量 Motor weight (kg)	底座参考重量 Foundation reference weight (kg)
4极(Pole)	100-260	132S	5.5	400	305	475	658	930	365		350	70	475	6-M16×300	72	80
		132M	7.5					970	385				515		84	
		160M	11				700	1060	430				605		130	100
		160L	15					1100	450				650		145	
	100-320	180M	18.5				725	1100	450				670		180	110
		180L	22					1140	470				710		200	
	100-400	200L	30				750	1190	495				775		270	190
		225S	37				780	1220	510				820		284	
		225M	45					1240	520				845		320	

SLQS型泵安装尺寸 SLQS TYPE PUMP INSTALLATION DIMENSION

125-240至125-480(见结构图1或2)安装尺寸 (See structural drawing 1 or 2) installation dimension

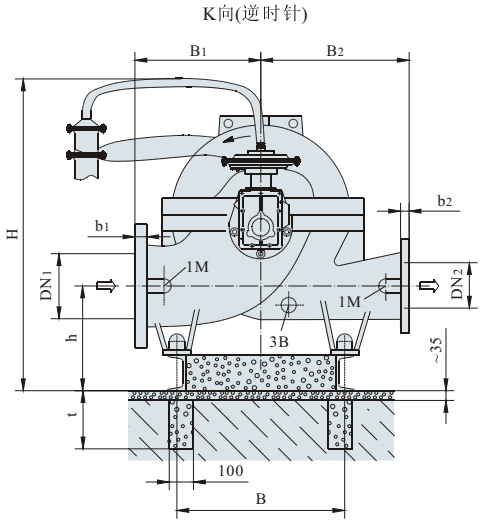

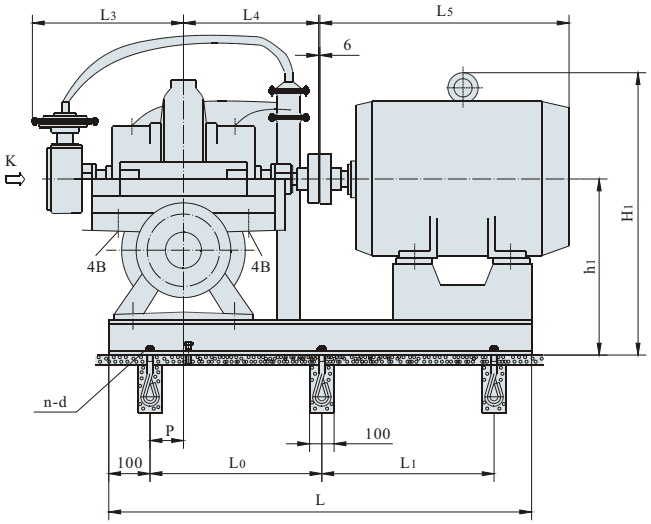

连接螺纹尺寸
Connecting thread size

1M	压力表 Piexometer	R 1/2
3B	排水孔 Drainage hole	R 1/2
4B	漏液排出孔 Drainage hole for leaked liquid	R 3/4

主要外形尺寸 EXTERNAL DIMENSION

泵型号 Pump type	法兰尺寸 Flange dimension (mm)				泵尺寸 Pump dimension (mm)					重量 Weight (kg)	
	DN_1	DN_2	b_1	b_2	B_1	B_2	L_4	H≤	L_3	泵 Pump	含水量 Water content
125-240	200	125	30	26	370	370	515	1200	666	390	35
125-300										410	40
125-380										420	45
125-480					450	450				530	55

电机尺寸－Y型电机 MOTOR DIMENSION-Y TYPE MOTOR

电机极数 Motor pole	泵型号 Pump type	电机型号 Motor type	电机功率 Motor power (kW)	B	h	h_1	H_1	L	L_0	L_1	t	P	L_5	n-d	电机重量 Motor weight (kg)	底座参考重量 Foundation reference weight (kg)
4极(Pole)	125-240	132M	7.5	450	320	520	703	1100	450		350	105	515	6-M16×300	84	80
		160M	11				745	1190	495				605		130	
		160L	15					1240	520				650		145	
	125-300	180M	18.5				770	1240	520				670		180	110
		180L	22					1280	540				710		200	
		200L	30				795	1320	560				775		270	190
	125-380	225S	37			565	870	1350	575				820		284	
		225M	45					1380	590				845		320	
		250M	55				890	1440	620				930		427	250
		280S	75	457	345	590	950	1520	660				1000		562	
4极(Pole)	125-480	225S	37	560	320	565	870	1350	575		350	105	820	6-M16×300	284	190
		225M	45					1380	590				845		320	
		250M	55				890	1440	620				930		427	250
		280S	75				925	1510	655				1000		562	
		280M	90					1560	680				1050		667	
		315S	110				1115	1630	715				1270		1000	410

SLQS型泵安装尺寸 SLQS TYPE PUMP INSTALLATION DIMENSION

150-280至150-570(见结构图1或2)安装尺寸 (See structural drawing 1 or 2) installation dimension

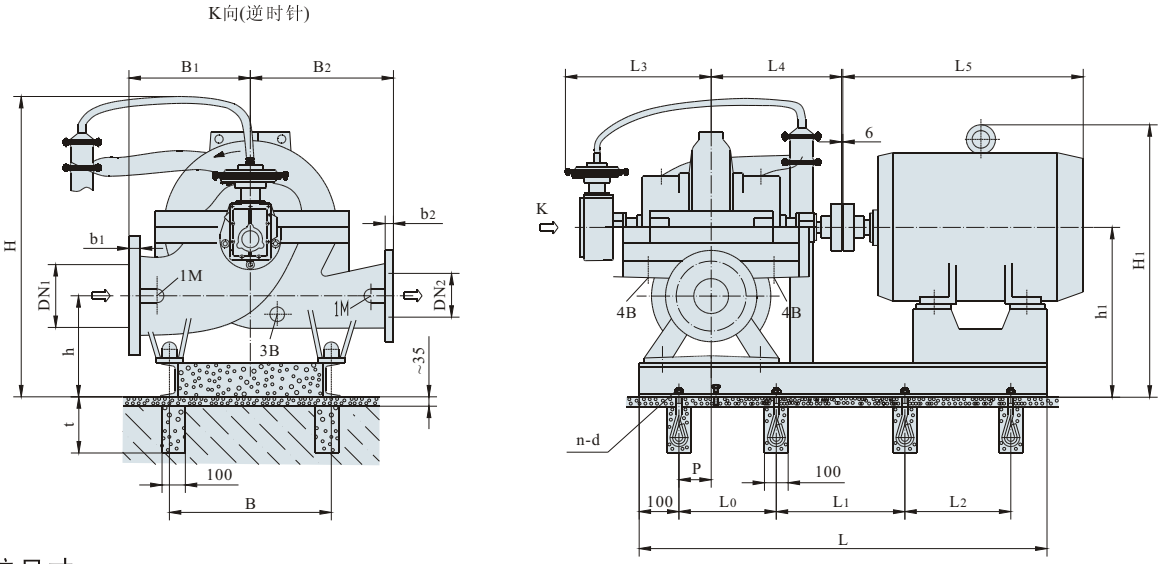

连接螺纹尺寸
Connecting thread size

1M	压力表 Piexometer	R 1/2
3B	排水孔 Drainage hole	R 1/2
4B	漏液排出孔 Drainage hole for leaked liquid	R 3/4

主要外形尺寸 EXTERNAL DIMENSION

泵型号 Pump type	法兰尺寸 Flange dimension (mm)				泵尺寸 Pump dimension (mm)					重量 Weight (kg)	
	DN1	DN2	b1	b2	B1	B2	L4	H≤	L3	泵 Pump	含水量 Water content
150-280	200	150	30	28	400	400	515	1350	666	427	50
150-350										439	60
150-450					450	450	590	1350	699	560	75
150-570					600	500				726	90

电机尺寸－Y型电机 MOTOR DIMENSION-Y TYPE MOTOR

电机极数 Motor pole	泵型号 Pump type		电机型号 Motor type	电机功率 Motor power (kW)	B	h	h1	H1	L	L0	L1	L2	t	P	L5	n-d	电机重量 Motor weight (kg)	底座参考重量 Foundation reference weight (kg)
4极(Pole)	150-350	150-280	180M	18.5	450	320	520	770	1240	520		-	350	105	670	6-M16×300	180	110
			180L	22					1280	540					710		200	
			200L	30				795	1320	560					775		270	190
			225S	37				825	1350	575					820		284	
			225M	45					1380	590					845		320	
			250M	55				845	1440	620					930		427	250
			280S	75	457	345	545	905	1520	660				120	1000		562	
4极(Pole)		150-450	200L	30	560	320	565	840	1450	625		-	350	150	775	6-M16×300	270	190
			225S	37				870	1470	635					820		284	
			225M	45					1500	650					845		320	
			250M	55				890	1560	680					930		427	250
			280S	75				925	1630	715					1000		562	
			280M	90					1680	740					1050		667	
			315S	110				1115	1750	775					1270		1000	410
			315M	132					1800	800					1340		1100	
4极(Pole)		150-570	315S	110	700	380	680	1230	1750	775		-	450	150	1270	6-M20×400	1000	
			315M	132					1800	800					1340		1100	
			315L	160-200					1830	815					1340		1240	
			355(6KV)	250				1105	2360	720	720				1820	8-M20×400	2160	440

SLQS型泵安装尺寸 SLQS TYPE PUMP INSTALLATION DIMENSION

200-340至200-660(见结构图1或2 See structural drawing 1 or 2) 安装尺寸 Installation dimension

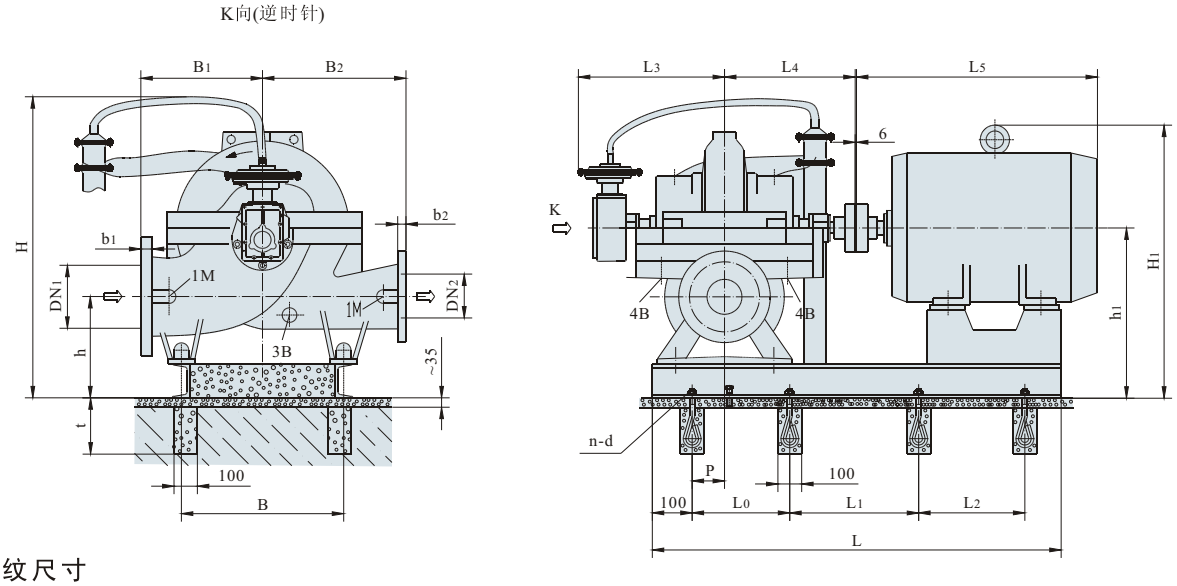

连接螺纹尺寸
Connecting thread size

1M	压力表 Piexometer	R 1/2
3B	排水孔 Drainage hole	R 1/2
4B	漏液排出孔 Drainage hole for leaked liquid	R 3/4

主要外形尺寸 EXTERNAL DIMENSION

泵型号 Pump type	法兰尺寸 Flange dimension (mm)				泵尺寸 Pump dimension (mm)					重量 Weight (kg)	
	DN_1	DN_2	b_1	b_2	B_1	B_2	L_4	H≤	L_3	泵 Pump	含水量 Water content
200-340	250	200	32	30	450	450	590	1400	699	580	80
200-410					500	500				597	95
200-530					600		655		764	815	115
200-660					650	550				1090	140

电机尺寸－Y型电机 MOTOR DIMENSION-Y TYPE MOTOR

电机极数 Motor pole	泵型号 Pump type		电机型号 Motor type	电机功率 Motor power (kW)	B	h	h_1	H_1	L	L_0	L_1	L_2	t	P	L_5	n-d	电机重量 Motor weight (kg)	底座参考重量 Foundation reference weight (kg)
4极(Pole)	200-410	200-340	225S	37	560	380	620	925	1470	635		-	450	150	820	6-M16×300	284	190
			225M	45					1500	650					845		320	
			250M	55				945	1560	680					930		427	250
			280S	75				980	1630	715					1000		562	
			280M	90					1680	740					1050		667	
			315S	110				1170	1750	775					1270		1000	410
			315M	132					1800	800					1340		1100	
4极(Pole)	200-530		315S	110	700	440	740	1290	1810	805		-	450	150	1270	6-M20×400	1000	410
			315M	132					1860	830					1340		1100	
			315L	160-200					1890	845					1340		1240	
			355(6KV)	250				1165	2450	750		750			1820	8-M20×400	1840	440
			355(6KV)	280														
4极(Pole)	200-660		315L	160-200	700	430	780	1330	1890	845		-	650	150	1340	6-M24×400	1240	410
			355(6KV)	250-315				1595	2450	750		750			1820	8-M24×400	2160	410
			400(6KV)	355-450	710	460	810	1740	2570	790		790		150	1980		-	440

SLQS型泵安装尺寸 SLQS TYPE PUMP INSTALLATION DIMENSION

250-390至250-610(见结构图1或2)安装尺寸 (See structural drawing 1 or 2) installation dimension

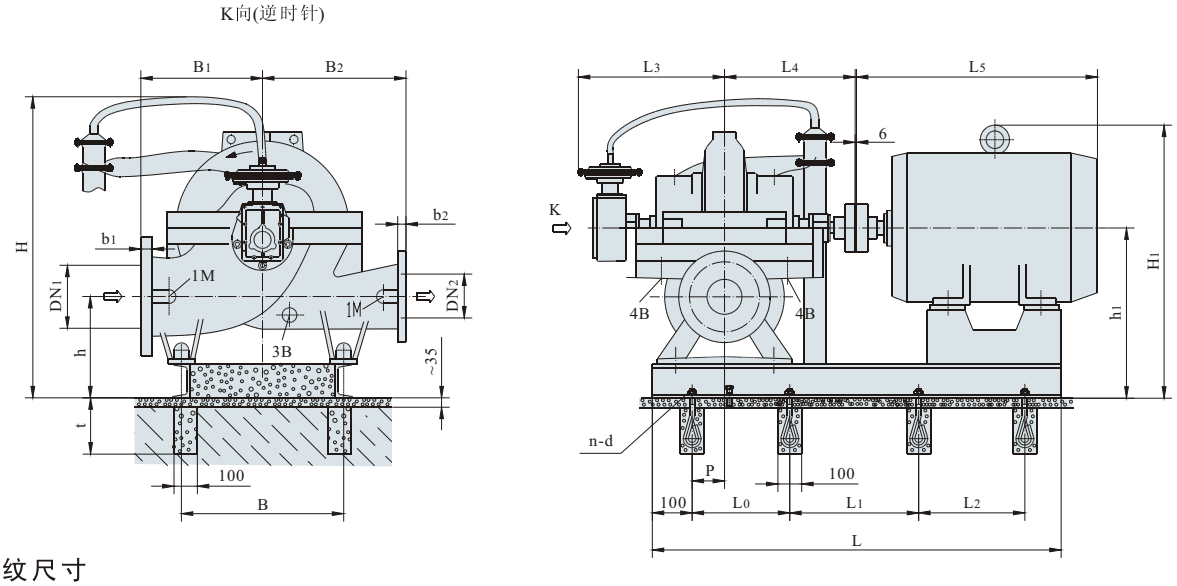

连接螺纹尺寸
Connecting thread size

1M	压力表 Piexometer	R 1/2
3B	排水孔 Drainage hole	R 1/2
4B	漏液排出孔 Drainage hole for leaked liquid	R 3/4

主要外形尺寸 EXTERNAL DIMENSION

泵型号 Pump type	法兰尺寸 Flange dimension (mm)				泵尺寸 Pump dimension (mm)					重量 Weight (kg)	
	DN1	DN2	b1	b2	B1	B2	L4	H≤	L3	泵 Pump	含水量 Water content
250-390	300	250	36	32	500	500	655	1585	764	850	125
250-470					550	550	730		815	1050	145
250-610					650	550				1400	180

电机尺寸－Y型电机 MOTOR DIMENSION-Y TYPE MOTOR

电机极数 Motor pole	泵型号 Pump type	电机型号 Motor type	电机功率 Motor power (kW)	B	h	h1	H1	L	L0	L1	L2	t	P	L5	n-d	电机重量 Motor weight (kg)	底座参考重量 Foundation reference weight (kg)
4极(Pole)	250-390	280S	75	700	480	780	1140	1690	745		-	450	150	1000	6-M20×400	562	250
		280M	90					1750	775					1050		667	
		315S	110				1330	1810	805					1270		1000	410
		315M	132					1860	830					1340		1100	
		315L	160					1890	845					1340		1240	
4极(Pole)	250-470	315S	110	700	500	800	1350	1950	875		-	450	210	1270	6-M20×400	1000	250
		315M	132					2000	900					1340		1100	410
		315L	160-200					2030	915					1340		1240	
		355(6KV)	220-280				1225	2570	790		790			1620	8-M20×400	2160	440
4极(Pole)	250-610	315L	200	700	480	830	1380	2030	915		-	650	210	1340	6-M24×400	1240	410
		355(6KV)	250-315				1255	2570	790		790			1820	8-M24×400	2160	440
		400(6KV)	400-560	710	510	860	1295	2720	840		840		230	1940		2620	480

SLQS型泵安装尺寸 SLQS TYPE PUMP INSTALLATION DIMENSION

300-330至300-550(见结构图1或2 See structural drawing 1 or 2)、300-710(见结构图3 See structural drawing 3) 安装尺寸 Installation dimension

K向(逆时针)

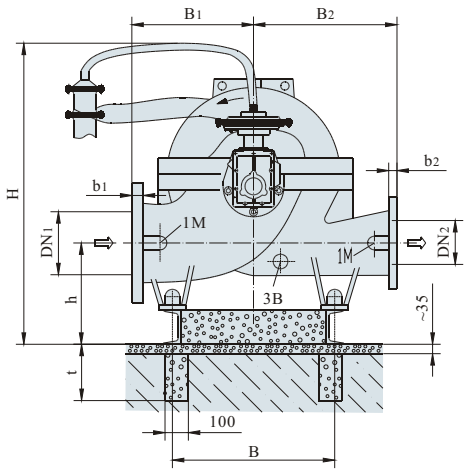

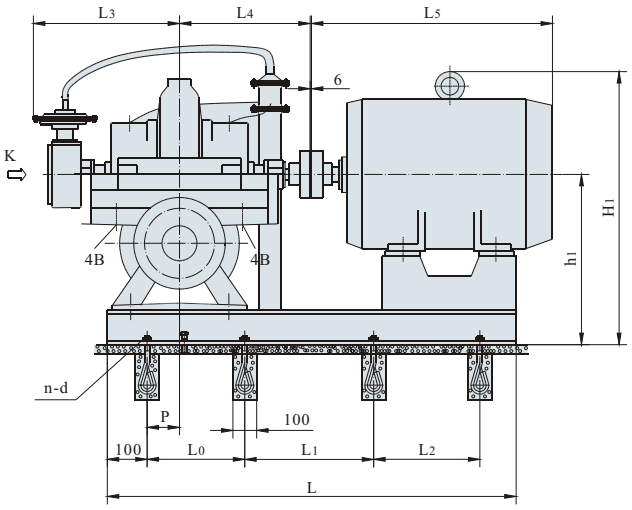

连接螺纹尺寸
Connecting thread size

1M	压力表 Piexometer	R 1/2
3B	排水孔 Drainage hole	R 1/2
4B	漏液排出孔 Drainage hole for leaked liquid	R 3/4

主要外形尺寸 EXTERNAL DIMENSION

泵型号 Pump type	法兰尺寸 Flange dimension (mm)				泵尺寸 Pump dimension (mm)					重量 Weight (kg)	
	DN1	DN2	b1	b2	B1	B2	L4	H≤	L3	泵 Pump	含水量 Water content
300-330	350	300	40	36	550	500	655	1750	864	910	100
300-450	400	300	44	36	650	550	730	1750	915	1400	190
300-550	400	300	44	36	700	650	810	1750	985	1930	225
300-710	400	300	48	40	750	650	935	1750	1148	2150	275

电机尺寸－Y型电机 MOTOR DIMENSION-Y TYPE MOTOR

电机极数 Motor pole	泵型号 Pump type	电机型号 Motor type	电机功率 Motor power (kW)	B	h	h1	H1	L	L0	L1	L2	t	P	L5	n-d	电机重量 Motor weight (kg)	底座参考重量 Foundation reference weight (kg)
4极(Pole)	300-330	225S	37	700	510	810	1115	1540	670		-	450	150	820	6-M20×400	284	190
		225M	45				1115	1560	680					845		320	
		250M	55				1135	1620	710					930		427	250
		280S	75				1170	1690	745					1000		562	
		280M	90				1170	1750	775					1050		667	
		315S	110				1360	1810	805					1270		1000	
4极(Pole)	300-450	315L	160-200	700	520	870	1420	2030	915		-	450	210	1340		1240	410
		355(6KV)	250-315				1295	2570	790		790			1820	8-M20×400	2160	440
4极(Pole)	300-550	355(6KV)	250-280	950	560	932	1335	2660	820		820	650	210	1820	8-M24×400	2160	440
		400(6KV)	355-560				1345	2780	860		860			1940		2620	480
4极(Pole)	300-710	400(6KV)	400-560	950	550	950	1385	2780	860		860	650	210	1940	8-M24×400	2620	480
		450(6KV)	630-900				1435	2900	900		900			2080		3850	
		500(6KV)	1120				1490	3200	1000		1000			2550		4420	520

SLQS型泵安装尺寸 SLQS TYPE PUMP INSTALLATION DIMENSION

350-380至350-520(见结构图1或2 See structural drawing 1 or 2)、350-640(见结构图3 See structural drawing 3)安装尺寸 Installation dimension

K向(逆时针)

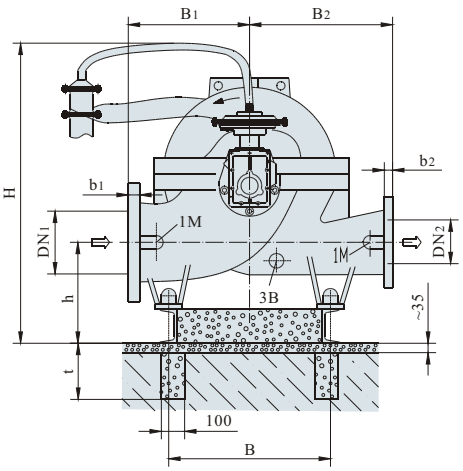

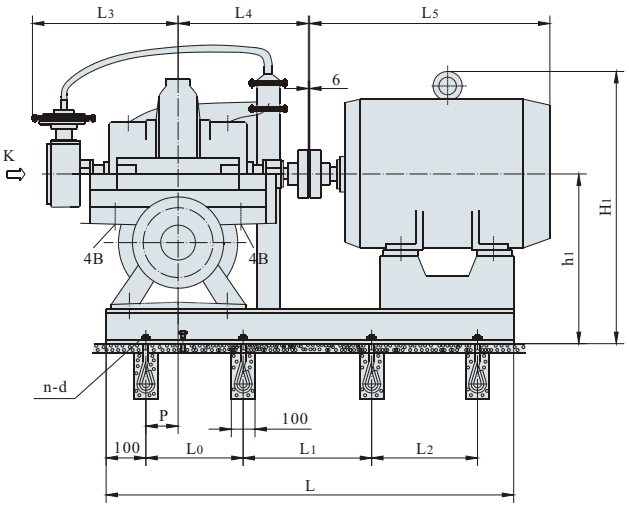

连接螺纹尺寸
Connecting thread size

1M	压力表 Piexometer	R 1/2
3B	排水孔 Drainage hole	R 1/2
4B	漏液排出孔 Drainage hole for leaked liquid	R 3/4

主要外形尺寸 EXTERNAL DIMENSION

泵型号 Pump type	法兰尺寸 Flange dimension (mm)				泵尺寸 Pump dimension (mm)					重量 Weight (kg)	
	DN1	DN2	b1	b2	B1	B2	L4	H≤	L3	泵 Pump	含水量 Water content
350-380	400	350	44	40	650	550	730	1715	915	1200	160
350-440					750	650	810		985	1450	240
350-520					700					2000	290
350-640					740	670	910	1830		2390	324

电机尺寸－Y型电机 MOTOR DIMENSION-Y TYPE MOTOR

电机极数 Motor pole	泵型号 Pump type			电机型号 Motor type	电机功率 Motor power (kW)	B	h	h1	H1	L	L0	L1	L2	t	P	L5	n-d	电机重量 Motor weight (kg)	底座参考重量 Foundation reference weight (kg)
4极(Pole)			350-380	280M	90	700	520	870	1230	1880	840		-	450	210	1050	6-M20×400	667	250
				315S	110				1420	1950	875					1270		1000	410
				315M	132					2000	900					1340		1100	
				315L	200					2030	915					1340		1240	
4极(Pole)			350-440	315L	200	950	550	950	1500	2110	955		-	650	210	1340	6-M24×400	1240	410
		350-520		355(6KV)	250-315				1375	2660	820		820			1820	8-M24×400	2160	440
	350-640			400(6KV)	355-560				1385	2780	860		860			1940		2620	480
				450(6KV)	630-900				1435	2900	900		900			2080		3300	
				500(6KV)	1000				1540	3365	1055		1055			2550		4070	560

SLQS型泵安装尺寸 SLQS TYPE PUMP INSTALLATION DIMENSION

400-550(见结构图2 See structural drawing 2)、400-600(见结构图3 See structural drawing 3) 安装尺寸 Installation dimension

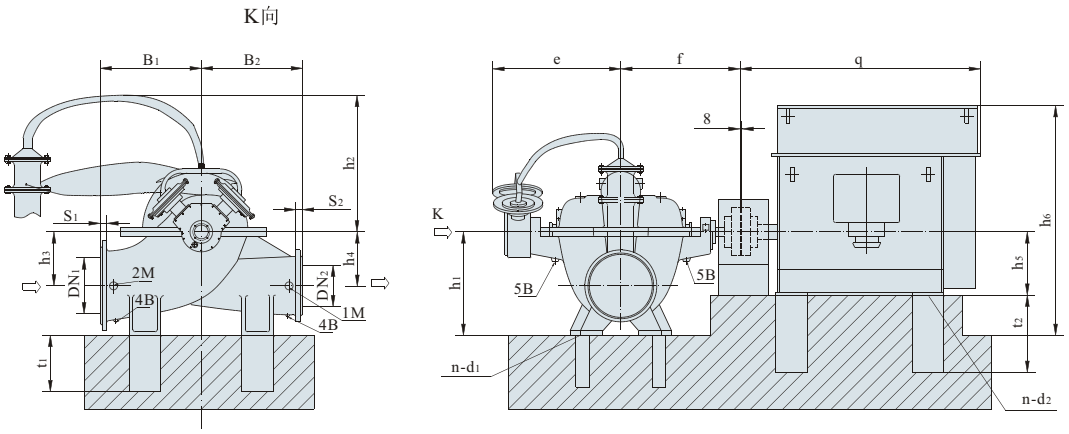

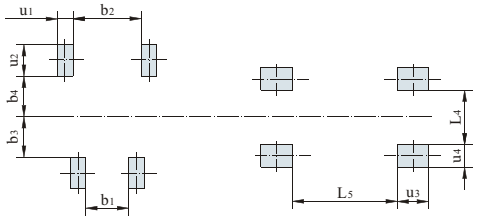

连接螺纹尺寸
Connecting thread size

1M	压力表 Piexometer	R 1/2
2M	真空表 Vacuum	R 1/2
4B	排水孔 Drainage hole	R 1
5B	漏液排出孔 Drainage hole for leaked liquid	R 1

主要外形尺寸 EXTERNAL DIMENSION

泵型号 Pump type	法兰尺寸 Flange dimension (mm)				泵尺寸 Pump dimension (mm)													泵重量 Pump weight (kg)
	DN1	DN2	S1	S2	B1	B2	e	f	h1	h2	h3	h4	b1	b2	b3	b4	n-d1	
400-550	500	400	42	38	800	750	985	810	900	800	425	500	400	400	250	250	4-35	2300
400-600							1193	980		847							4-42	2650

电机尺寸－Y型电机 MOTOR DIMENSION-Y TYPE MOTOR

电机极数 Motor pole	泵型号 Pump type		电机型号 Motor type	电机功率 Motor power (kW)	l4	l5	h5	h6	u1	u2	u3	u4	t1	t2	n-d2	q	电机重量 Motor weight (kg)
4极(Pole)		400-550	355(6KV)	315	500	335	355	1315	130	300	565	130	650	850	4-28	1890	2380
			400(6KV)	400	580	435	400	1435							4-35	1980	2590
			400(6KV)	450													3100
			400(6KV)	500												2128	3300
			400(6KV)	560													3500
	400-600		450(6KV)	630	650	520	450	1585			600	150					3700
			450(6KV)	710												2558	3880
			450(6KV)	800													4020
			450(6KV)	900													4170
			500(6KV)	1000	750	595	500	1640			655	150		1200	4-42		4340
			500(6KV)	1120													4850
			500(6KV)	1250													5100

SLQS型泵安装尺寸 SLQS TYPE PUMP INSTALLATION DIMENSION

500-520至500-860(见结构图3)安装尺寸 (See structural drawing 3) Installation dimension

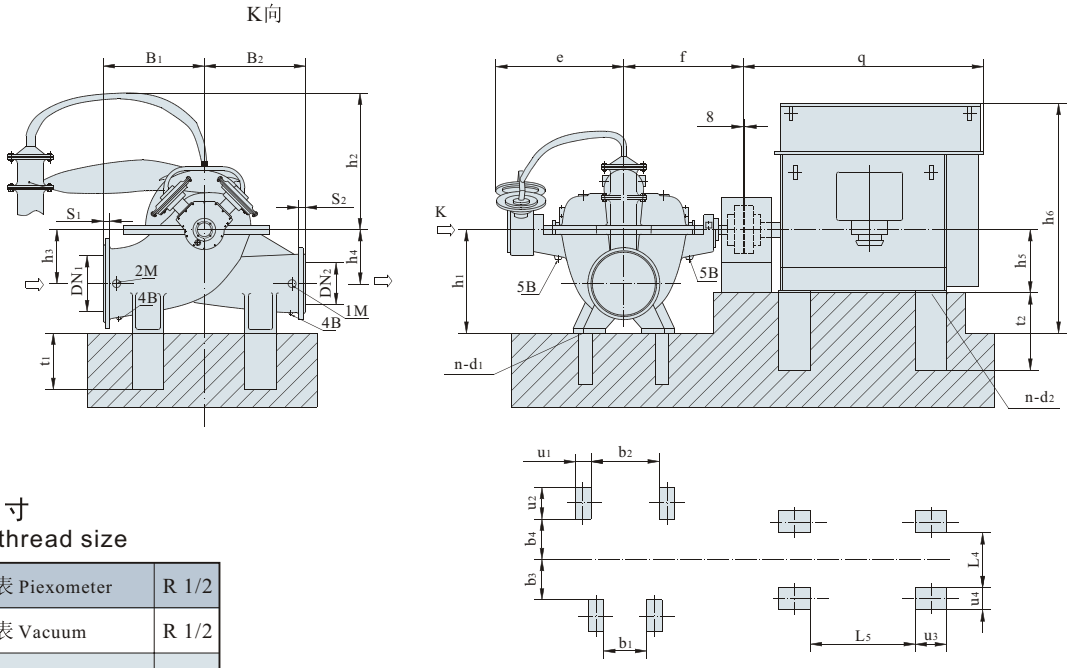

连接螺纹尺寸
Connecting thread size

1M	压力表 Piexometer	R 1/2
2M	真空表 Vacuum	R 1/2
4B	排水孔 Drainage hole	R 1
5B	漏液排出孔 Drainage hole for leaked liquid	R 1

主要外形尺寸 EXTERNAL DIMENSION

泵型号 Pump type	法兰尺寸 Flange dimension (mm)				泵尺寸 Pump dimension (mm)													泵重量 Pump weight (kg)
	DN1	DN2	S1	S2	B1	B2	e	f	h1	h2	h3	h4	b1	b2	b3	b4	n-d1	
500-520	600	500	48	42	850	750	1220	1025	900	850	475	475	700	1000	250	290	4-30	2500
500-650					950	800	1310	1095	980	880	495	495			300	340	4-35	2770
500-710					1050	850	1255	1085	1000	860	550	620		1100	390	490	4-42	3500
500-800					1000	900	1300	1175	1050	900	600	600	725		440	540		4100
500-860					1050	950	1320	1210	1100	1010	650	650	750	1000	490	590		4550

电机尺寸 – Y型电机 MOTOR DIMENSION-Y TYPE MOTOR

电机极数 Motor pole	泵型号 Pump type	电机型号 Motor type	电机功率 Motor power (kW)	l4	l5	h5	h6	u1	u2	u3	u4	t1	t2	n-d2	q	电机重量 Motor weight (kg)
6极(Pole)	500-520	315L	132	268	288	315	1450	130	300	220	240	650	650	4-28	1340	1100
		355M	160-200	370	310	355				250					1545	1220
		355(6KV)	220	500	335	355	1345			565	130				1828	2180
		355(6KV)	250													2290
	500-650	400(6KV)	280	580	435	400	1435						850	4-35	1948	2290
		400(6KV)	315													2380
		400(6KV)	355													2490
		400(6KV)	400													2590
	500-710	450(6KV)	450	650	520	450	1585			600	150	850			2128	3100
		450(6KV)	500													3300
		450(6KV)	560													3500
		450(6KV)	630													3700
	500-800	500(6KV)	710	750	595	500	1640			655		1200	1200	4-42	2558	3880
		500(6KV)	800													4020
		500(6KV)	900													4170
		500(6KV)	1000													4340
	500-860	560(6KV)	1120	830	710	560	1700			690	170				2775	4850
		560(6KV)	1250													5100
		560(6KV)	1400													5350
		630(6KV)	1600	930	830	630	1770			770	190			4-48	3038	6300

SLQS型泵安装尺寸 SLQS TYPE PUMP INSTALLATION DIMENSION

600-560至600-860(见结构图3) 安装尺寸 (See structural drawing 3) Installation dimension

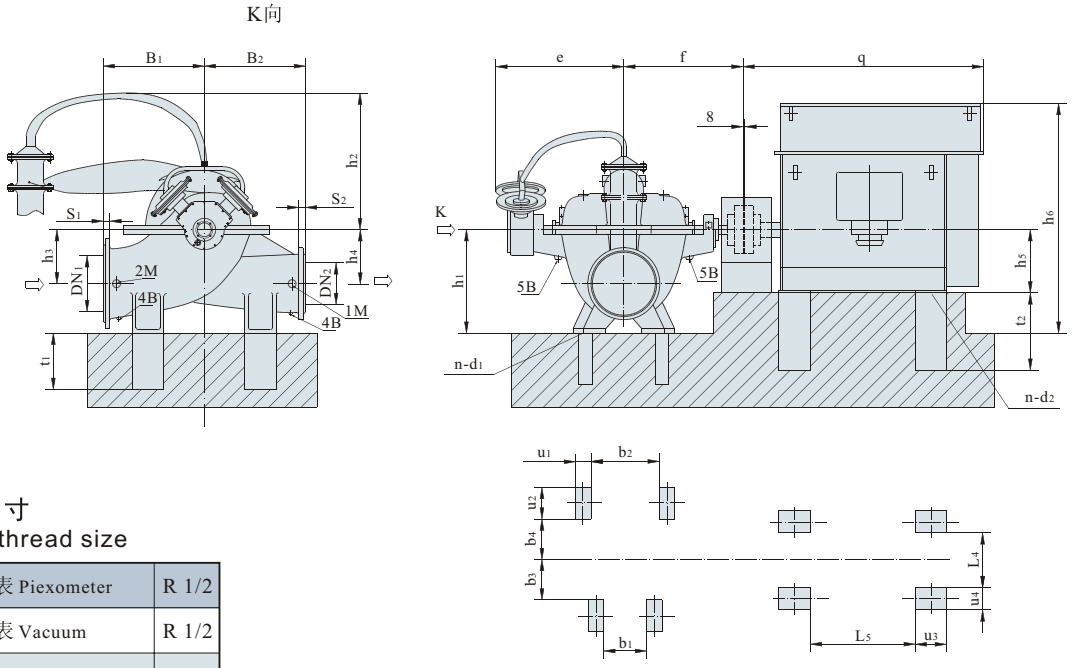

连接螺纹尺寸
Connecting thread size

1M	压力表 Piexometer	R 1/2
2M	真空表 Vacuum	R 1/2
4B	排水孔 Drainage hole	R 1
5B	漏液排出孔 Drainage hole for leaked liquid	R 1

主要外形尺寸 EXTERNAL DIMENSION

泵型号 Pump type	法兰尺寸 Flange dimension (mm)				泵尺寸 Pump dimension (mm)													泵重量 Pump weight (kg)
	DN1	DN2	S1	S2	B1	B2	e	f	h1	h2	h3	h4	b1	b2	b3	b4	n-d1	
600-560	700	600	54	48	1100	900	1285	1080	1100	1010	610	610	650	950	400	500	4-35	3900
600-630					1000	1000	1240	1060	1050	920	545	545			500		4-42	4100
600-720						1100	1297	1160					750	1050				
600-860					1100	1200	1400	1275	1100	1015	580	580			600		4-55	5200

电机尺寸 – Y型电机 MOTOR DIMENSION-Y TYPE MOTOR

电机极数 Motor pole	泵型号 Pump type	电机型号 Motor type	电机功率 Motor power (kW)	l4	l5	h5	h6	u1	u2	u3	u4	t1	t2	n-d2	q	电机重量 Motor weight (kg)
6极(Pole)	600-560	355M	160	370	340	355	1650	150	300	220	240	650	650	4-28	1545	1620
		355M	200													1750
		355(6KV)	220	500	335		1345			565	130				1828	2180
		355(6KV)	250													2290
	600-630	400(6KV)	280	580	435	400	1435						850	4-35	1948	2290
		400(6KV)	315													2380
		400(6KV)	355													2490
		400(6KV)	400													2590
	600+-720	450(6KV)	450	650	520	450	1585			600	150	850			2128	3100
		450(6KV)	500													3300
		450(6KV)	560													3500
		450(6KV)	630													3700
	600-860	500(6KV)	710	750	595	500	1640			655		1200	1200	4-42	2558	3880
		500(6KV)	800													4020
		500(6KV)	900													4170
		500(6KV)	1000													4340
		560(6KV)	1120	830	710	560	1700			690	170				2775	4850
		560(6KV)	1400													5350
		630(6KV)	1600	930	830	630	1770			770	190			4-48	3038	6300

SLQS型泵安装尺寸 SLQS TYPE PUMP INSTALLATION DIMENSION

700-580至700-830(见结构图3)安装尺寸 (See structural drawing 3) Installation dimension

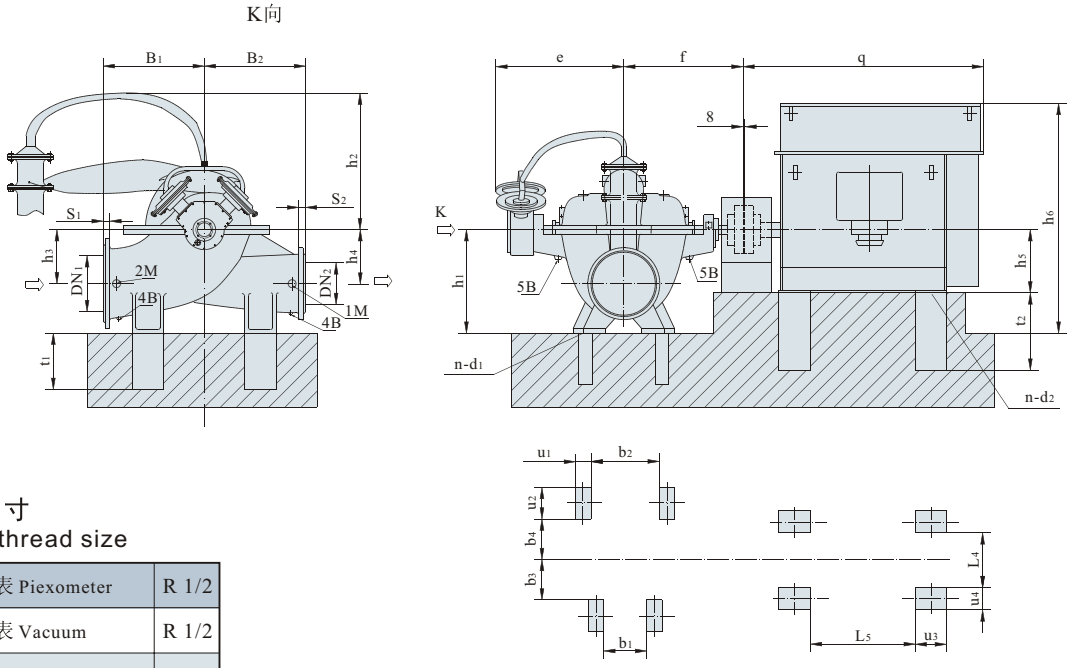

连接螺纹尺寸
Connecting thread size

1M	压力表 Piexometer	R 1/2
2M	真空表 Vacuum	R 1/2
4B	排水孔 Drainage hole	R 1
5B	漏液排出孔 Drainage hole for leaked liquid	R 1

主要外形尺寸 EXTERNAL DIMENSION

泵型号 Pump type	法兰尺寸 Flange dimension (mm)				泵尺寸 Pump dimension (mm)													泵重量 Pump weight (kg)
	DN1	DN2	S1	S2	B1	B2	e	f	h1	h2	h3	h4	b1	b2	b3	b4	n-d1	
700-580	800	700	58	54	1300	800	1490	1300	1150	1015	600	600	640	940	250	550	4-42	4600
700-700					1200	1150	1530	1360	1170	1020	620	620			550			6690
700-830					1250	1250	1560	1440	1200	1110	650	650			600	600		7000

电机尺寸 – Y型电机 MOTOR DIMENSION-Y TYPE MOTOR

电机极数 Motor pole	泵型号 Pump type	电机型号 Motor type	电机功率 Motor power (kW)	l4	l5	h5	h6	u1	u2	u3	u4	t1	t2	n-d2	q	电机重量 Motor weight (kg)
6极(Pole)	700-580	400(6KV)	315	580	435	400	1435	150	350	565	130	1200	850	4-35	1828	2380
		400(6KV)	355													2490
		400(6KV)	400													2590
	700-700	450(6KV)	500	650	520	450	1585			600	150				2128	3300
		450(6KV)	560													3500
		450(6KV)	630													3700
	700-830	500(6KV)	710	750	595	500	1640			655			1200	4-42	2558	3880
		500(6KV)	800													4020
		500(6KV)	900													4170
		500(6KV)	1000													4340
		560(6KV)	1120	830	710	560	1706			690	170				2775	4850
		560(6KV)	1400													5100
		630(6KV)	1600	930	830	630	1770			770	190		1200	4-48	3038	6300
		630(6KV)	2000													6950

SLQS型泵安装尺寸 SLQS TYPE PUMP INSTALLATION DIMENSION

800-770至800-980(见结构图3) 安装尺寸 (See structural drawing 3) Installation dimension

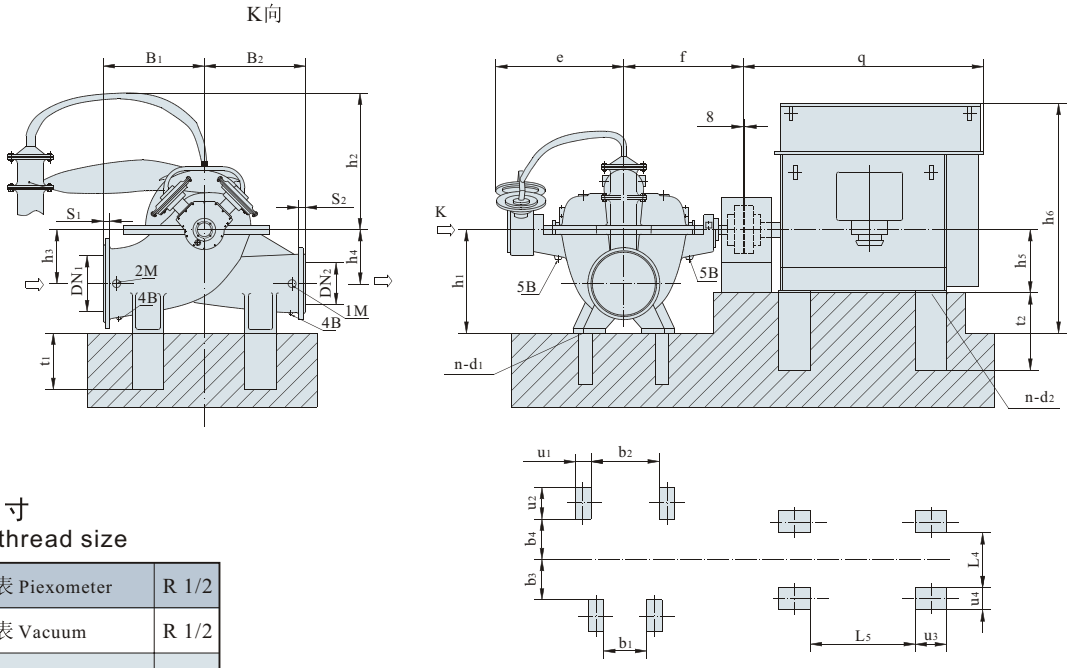

连接螺纹尺寸
Connecting thread size

1M	压力表 Piexometer	R 1/2
2M	真空表 Vacuum	R 1/2
4B	排水孔 Drainage hole	R 1
5B	漏液排出孔 Drainage hole for leaked liquid	R 1

主要外形尺寸 EXTERNAL DIMENSION

泵型号 Pump type	法兰尺寸 Flange dimension (mm)				泵尺寸 Pump dimension (mm)													泵重量 Pump weight (kg)
	DN1	DN2	S1	S2	B1	B2	e	f	h1	h2	h3	h4	b1	b2	b3	b4	n-d1	
800-770	900	800	62	58	1400	950	1580	1410	1380	1230	770	770	740	1040	350	500	4-42	7730
800-880						1125		1500	1360	1210					500	550	4-55	8050
800-980						1300	1679	1580	1370	1110	760	760			600	600		8530

电机尺寸 – Y型电机 MOTOR DIMENSION-Y TYPE MOTOR

电机极数 Motor pole	泵型号 Pump type	电机型号 Motor type	电机功率 Motor power (kW)	l4	l5	h5	h6	u1	u2	u3	u4	t1	t2	n-d2	q	电机重量 Motor weight (kg)
8极(Pole)	800-770	450(6KV)	400	650	520	450	1585	150	400	600	150	1200	850	4-35	2128	3180
		450(6KV)	450													3300
		500(6KV)	500	750	595	500	1640			655			1200	4-42	2558	4020
		500(6KV)	560													4170
		500(6KV)	630													4340
		500(6KV)	710													4480
	800-880	560(6KV)	800	830	710	560	1700			690	170				2775	5100
		560(6KV)	900													5320
		560(6KV)	1000													5550
	800-980	630(6KV)	1120	930	830	630	1770			770	190			4-48	3038	6660
		630(6KV)	1250													6980
		630(6KV)	1400													7300
		630(6KV)	1600													7580
		-	1800	-	-	-	-			-	-		-	-	-	-
		-	2000													

泵的安装 INSTALLATION

1、该系列泵只是帮助泵排气、吸水，在确定泵的安装高度时，还应严格按泵的气蚀余量来计算，以免泵发生气蚀。
2、机组安装时，按照双吸泵带底座及不带底座的安装方法进行安装及调正，调正后，底座进行灌浆。
3、泵出厂时，为了装箱方便，吸气阀部件及吸气管与泵头是分开的，当泵与电机安装完毕时，用户应另外设支点支撑吸气阀部件，也可将吸气阀部件焊接在管路上，吸气阀部件的高度应不低于泵吸水室。
4、吸气管共三根，最粗并透明的真空管一端与空气室连接，另一端与吸气阀部件顶部连接。另外两根较细的不锈钢软管，一端分别接在泵体两侧吸水室顶部，另一端分别接在吸气阀部件的下部。所有接头处必须无泄漏。
5、安装完毕后，用手盘动转子应灵活。
6、为保证吸上时间尽可能短及吸上能力尽可能强，应使管路尽量减少不必要的转弯及附件。整个管路从吸入到排出段不允许有高点存在(以免窝气)。
7、要保证管路绝对不漏气，否则会影响吸上能力及吸上时间。
8、泵的进出口必须装真空表和压力表。

1.This series pump is used for help exhaust and water suction. Decision of the pump is installation height should be calculated strictly according to the cavitation erosion margin of the pump so as to avoid cavitation with it.
2.Follow the way of installation for the pump either with a foundation or without to mount and adjust the pump unit.after adjustment ,the foundation begin to grout.
3.For the sake of convenience to pack when the pump is delivered ex-works, both suction valve and hose are se-Parated from the pump head. Users have to set up another support, at the end of both pump and motor installation, for the suction valve or weld it on the pipeline, with its height not lower than the water suction room of the pump.
4.In total of three air suction hoses. one end of the thickest and transparent one is connected to the air room and the other to the top of the air suction valve. One end of the another two thinner stainless steel hoses is connected to the top of the water suction rooms on both sides of the pump and the other to the lower part of the air suction valve. all the connections must be ensured without leak.
5.When finishing installation, move the rotor with hand it has to light.
6.To ensure the upward suction time possibly short and capacity possibly strong, reduce any unnecessary bending and fittings on the pipeline as can as possible and no high point is allowed to exist on the whole pipeline from suck-in to drain-out(to avoid air shelter).
7.Make sure of no air leak from the pipeline, or the upward-suction capacity and time would be affected.
8.Mount a vacuum meter and a pressure gauge on both inlet and outlet of the pump.

泵的启动、运转和停机 STARTING AND STOPPING

一、启动

1、启动前必须用手转动转子部件，应轻松灵活。
2、先用点式启动检查电机的旋转方向是否符合水泵转向要求。
3、检查自吸装置箱体内油位是否达到规定位置。
4、关闭出口闸阀及真空表、压力表旋塞，打开进口阀门。
5、启动电机，同时控制柜发出工作信号，泵开始排气，

1.Starting

1.Before starting, turn the rotor with hand, it has to be flexible and light.
2.First use spot-starting to check if the motor’ s moving, direction in line with the requirement for the pump To run.
3.Check if the oil level inside of the self-suction device tank gets to the required position.
4.Close the gate valve at the outlet and the corks of both vacuum-meter and piezometer and open the inlet valve.

当水吸上时，慢慢打开出口阀门到所需要的扬程为止。此时压力表，真空表旋塞也应打开。

二、运转

1、水泵轴承最高温度不应超过75℃。

2、轴承内润滑油脂以占轴承体空间的1/3～1/2为宜。

3、填料磨损时可适当压紧填料压盖，若磨损过多，应予更换。

4、运转过程中，如发现噪声或其它不正常的声音时，应立即停车检查原因，加以消除。

5、不允许关闭进出口阀门运转。

6、经常检查泵各零部件及地脚螺栓是否有松动现象，检查电机及泵是否振动。

三、停机

慢慢关闭出口阀门及真空表、压力表旋塞，然后关闭电机。如果外界温度较低时，则应将泵体内剩水放净，以免冻坏泵体。

2.Running

1.The maximum temperature of the pump’s bearing should not be over 75℃.

2.It is proper for the lubricating grease inside of the bearing to take 1/3-1/2 of the space in side of the bearing body.

3.Properly tighten the stuffing gland in case of stuffing wear and replace the stuffing in case of too much wear.

4.Stop running at once, check the causes and remove them if noise or other abnormal sounds occur during running.

5.It is not allowed to have the pump run with both inlet and outlet valves closed.

6.Often check if every part and foot bolts of the pump loose and if there is any vibration with both pump and motor.

3.Stopping

Slowly close the outlet balbem bacuum-meter and piezometer and then the motor drain out the water completel inside of the pump casing when the outside temperature is too low so as to prebent the pump from damage by frost.

泵的维修与保养 MAINTENANCE

为了保证机组能长期安全、稳定地运行，泵必须经常维修。可根据平时对泵的监测情况来确定泵是否需要维修。

平常要经常对下列部位进行维修；

1、检查泵底座、泵、电机是否松动，松动会引起振动。

2、检查自吸装置的油位是否正常，并且在连续使用时，每季度换油一次。

3、检查是否由于填料磨损或自吸装置处密封件损坏，而产生漏气，从而延长抽气时间或泵不吸水。

4、检查填料漏水要均匀。

5、检查仪表、引线的状况是否良好。

To get along time safe and stable runing os the unit, the pump needs reparing soten,which ca be done by deciding upon the monitoring comditions to the pump at the usual time take a check on the following parts at all times:

1.check if the pump,pump foundation and motor are nomal ans change the oil noce every season in a continuous wore.

3.check if air leak occurs due to the stuffding or the seal wear on the self-suction device,which may cause an extended time of air suction or no water suctiong of the pump.

4.check if the leak from the stuffing is uniform.

5.check if the maters’ lead wires are intact.

故障原因及排除方法 FAILURES CAUSES AND TROUBLESHOOTING

故障现象 Failure	可能产生的原因 Possible causes	排除方法 Troubleshooting
不上水 No water goes up	1. 没通电或电机已坏 2. 进水管连接不严漏气 3. 盘根密封损坏进气 4. 出口单向阀关闭不严 5. 检查吸水管是否漏出水面 1.Not turned on or motor damaged 2.onlet pipe not strictly connected and leaks 3.foot seal damaged and lets ait in 4.outlet single-way valve not tightly closed 5.check if suction pipe out of water surface	1. 电工检查修好 2. 皂泡沫检查，重新连接 3. 更换盘根绳，或增加盘根 4. 拆开盖检查，清理杂物 5. 增加进水管浸没深水处 1.Repaor it by electrician 2.check with soap foam and reconnet it 3.replace foot rope 4.remove its cover for a check and remove foreign matters 5.extend the pipe and immerse it deeply in water
上水不足 In suffincient water getting upward	1. 叶轮及密封环间隙大 2. 轴承磨损过大 3. 填料压盖太松 4. 吸水管道及过滤网堵塞 1.too big interval with both impeller and seal ting 2.too much bearing wear 3.too loose stuffing gland 4.suck-in pipeline and filter screen blocked up	1. 更换零件 2. 更换轴承 3. 适当压紧压盖 4. 清除污物 1.Replace parts 2.replace it 3.properly tighten it 4.get rid of them
激烈振动或噪声大 Severe bibration or big noise	1.泵基础地面不平 2.联轴器不正 3.吸入装置故障 1.pump’s basic ground not flat 2.clutch not correctly positioned 3.a failure with suck-in device	1.重新搞好 2.用垫片调整电机，使轴与泵同心 3.拆检修复 1.Do it again 2.adjust motor with pads to have both shaft and pump concentric 3.remove and repair it
轴承过热 Bearing too hot	1.油室油量不足或过多 2.轴向力过大 1.oil in oil chamber ubenough or too much 2.too big axial force	1.填油或放油 2.查叶轮轴向位置并调整 1.Fill or discharge oil 2.check impeller’s axial position and afjust it
吸气管窜水 Water exists in airsuciton pipe	吸气阀内浮球关闭不严 Float-ball inside of are-suction valve not tightly closed	打开阀门顶盖，检查浮球，使用浮球遇水浮起时能够自动关闭 Open valve cover, check float-ball to have it floating up to be automaticallyclosed when there is water

由于我们在不断努力改进产品，我们保留样本数据更改的权利，敬请谅解。

As we are constantly endeavouring to improve the performance of our equipment.
The company reserves the right to make alteration from time to time and equipment differ from that detailed in this brochure.

上海连成(集团)有限公司
SHANGHAI LIANCHENG (GROUP) CO.,LTD.
上海连成泵业制造有限公司
SHANGHAI LIANCHENG PUMP-MANUFACTURE CO.,LTD.

地址：上海市江桥曹安公路3616-3618号
邮编：201812
总机：（021）59138888
传真：（021）59136782
800免费咨询电话：800-820-5009

Adress: 3616-3618 Cao'an Road, Jiangqiao, Shanghai
P.C.: 201812
Switchboard: （021）59138888
Fax: （021）59136782
800 Free consultation Tel: 800-820-5009

www.lcpumps.com
webmaster@lcpumps.com

□ 印刷日期：20th. Jul. 2006

版权所有 翻印必究 All rights reserved. Pirate is forbidden.