由于我们在不断努力改进产品，我们保留样本数据更改的权利，敬请谅解。

As we are constantly endeavouring to improve the performance of our equipment.
The company reserves the right to make alteration from time to time and equipment differ from that detailed in this brochure.

上海连成（集团）有限公司
SHANGHAI LIANCHENG (GROUP) CO.,LTD.

地址：上海市江桥曹安公路3616–3618号
邮编：201812
总机：(021) 59138888
传真：(021) 59136782
800免费咨询电话：800–820–5009
400免费咨询电话：400-188-5009

Address:3616–3618 Cao'an Road, Jiangqiao Shanghai
P.C.: 201812
Switchboard: (021) 59138888
Fax: (021) 59136782
800 Free consultation Tel:800–820–5009
400 Free consultation Tel：400-188-5009

www.lcpumps.com
webmaster@lcpumps.com

版权所有 翻印必究 ©连成集团
All rights reserved.Pirate is forbidden.

2016 年 第一版 第二次印刷
second printing and first edition in 2016

印刷日期：2016.08.30
Date of printing：2016.08.30

连成集团
LIANCHENG GROUP

XBD-GDL系列电动消防泵组

XBD-GDL SERIES ELECTRIC FIRE-FIGHTING PUMP GROUP

目　录

CONTENTS

产品概述
Outline of product　1

工作条件
Working conditions　1

产品特点
Product characteristic　1

型号意义
Model meaning　2

XBD-GDL型泵材质一览表
Table for XBD-GDL pump material　2

结构简图
Structure drawing　3

型谱图
Atlas of style　3

XBD-GDL 系列电动消防泵组性能曲线图
XBD-GDL series electric fire-fighting pump group property curve figures　4

性能参数表
Performance table　5

外形及安装尺寸表
External and installation dimension table　5

泵附件及其尺寸
Pump spare figure and dimensions　26

泵基础图及其联接尺寸
Pump basic figure and connection dimensions　26

管路损耗参考表
Reference table for pipeline loss　27

产品概述 Outline of product

XBD-GDL系列电动消防泵组系立式、多级、单吸、筒式离心泵，该系列产品采用现代优秀水力模型经计算机优化设计而成。产品结构紧凑、合理、造型美观，其可靠性和效率指标均有大幅度提高，严格符合最新国家标准GB6245-2006《消防泵》的规定。

XBD-GDL series electric fire-fighting pump group is a vertical multi-stage single-suction cylindrical centrifugal pump made with the computerized design of optimization with the modern excellent hydraulic model and features a compact structure and a reasonable and nice modelling and the indexes of both reliability and efficiency have been greatly raised, strictly conforming with the provisions is the latest national standard GB6245-2006,《 Fire-figthing Pumps》.

工作条件 Working conditions

流量	1～45L/s
压力	0.3～2.5MPa
温度	80℃以下
介质	清水及类似清水之液体
转向	从电机端看为顺时针方向

Capacity	1～45L/s
Pressure	0.3～2.5MPa
Temperature	Below 80℃
Media	Pure water and the liquid similar to pure water
Betating	Direction CW viewing from the motor

产品特点 Product characteristic

1、低噪音平稳运行

低噪音轴承的采用，具有精确水力特征的水力零件的设计，各分段外围的充水屏蔽不仅降低了流动噪音而且运行极其平稳；

2、简易的安装与装配

泵进出口管径相同且在同一条直线上，可以像阀门一样直接安装在管路上；应用壳式联轴器，泵与电机的联结不仅简便而且使传递效率有所提高；

1.Stable running with low noise

Use of a low-noise bearing, the design of the hy-draulic parts of the accurate hydraulic features and the water-filling shield on the periphery of each section makes the flowing noise lowered and the running extremely stable as well.

2.Simplified installation and assembly

With both inlet and outlet pipes of a same diameter and on one line, the pump can be directly mounted on the pipeline just like a valve; and with a casing-type clutch used, linkage between both pump and motor becomes very simple and makes the transmission efficiency raised to some extent.

3、无运转卡死现象

应用铜合金水导轴承与不锈钢泵轴，避免了各微小间隙处出现锈蚀咬死等现象，这对消防系统而言是十分重要的；

4、无渗漏

采用优质机械密封，确保运行场所的干净。

3.No jamming at running

With the copper alloy water-guide bearing and stainless stell pump shaft applied,the jamming due to rust and corrosion on each micro-space is prevented ,this is very important to a fire-fighting system.

4.No leakage

With the quality mechawnical seal used , the site where the pump runs is made sure of being clean.

型号意义 Model meaning

XB D 4.3 / 5 - 50GDL × 3

- 3：泵级数为3 of 3 stages
- 50GDL：50GDL型 Model 50GDL
- 5：流量为5（L/s） Capacity 5(L/s)
- 4.3：出口压力为0.43(MPa) Outlet pressure 0.43(MPa)
- D：电动机驱动 Motor actuating
- XB：消防泵组 Fire-fighting pump group

XBD–GDL型泵材质一览表 Table for XBD–GDL pump material

进出水段 In-outlet suction	HT250 ZG230-450	叶轮 Impeller	ZCuSn10Pb1 ZH62 ZG1Cr13NiMo ZG1Cr18Ni9
中段 Middle suction			
导叶 Guide vane	HT250 ZG230-450		
轴 Shaft	2Cr13	轴套 Bearing sleeve	2Cr13

注：若客户对材质有特殊要求，请与我公司联系。

Note: in case of a special requirement on the material, please contact this company.

结构简图 Structure drawing

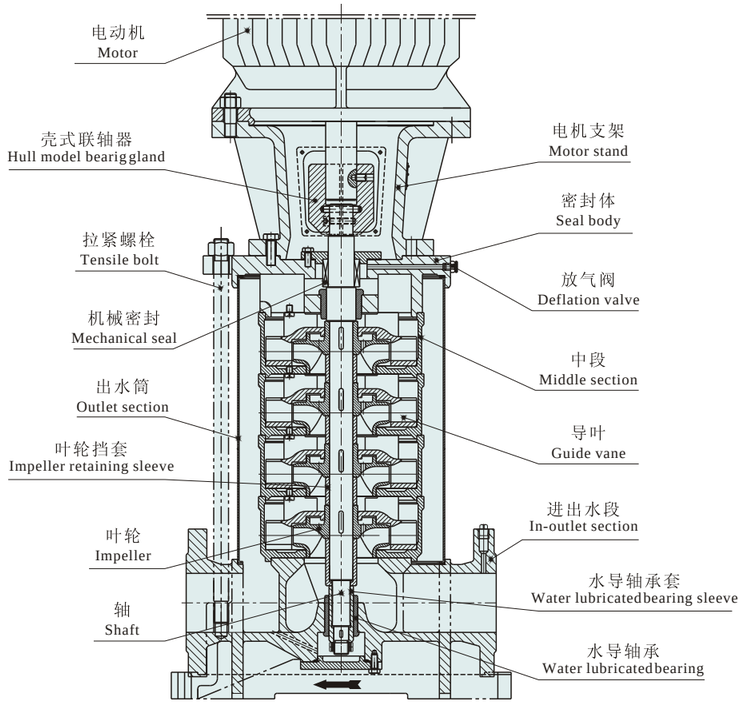

型谱图 Atlas of style

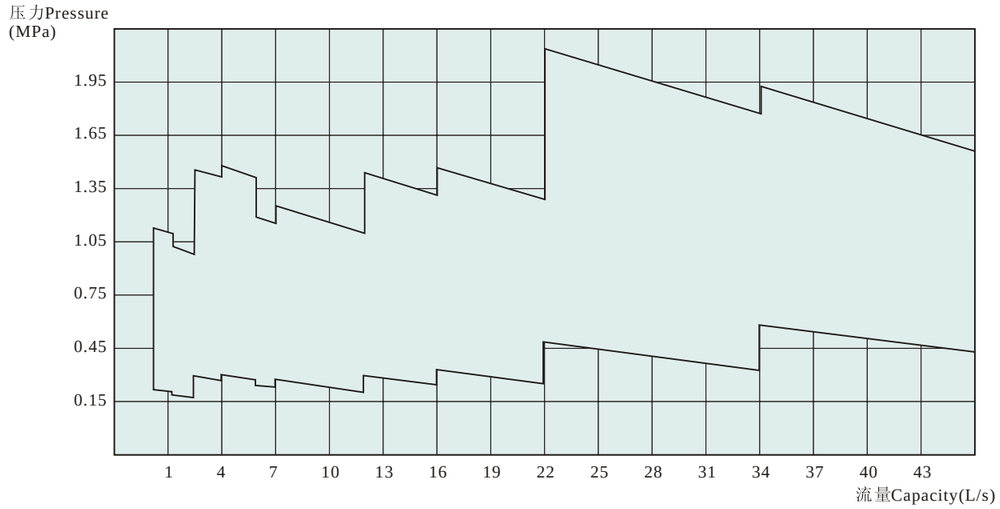

XBD–GDL系列电动消防泵组性能曲线图 XBD–GDL series electric fire–fighting pump group property curve figures

流量-压力特性曲线
Capacity-pressure property curve figures

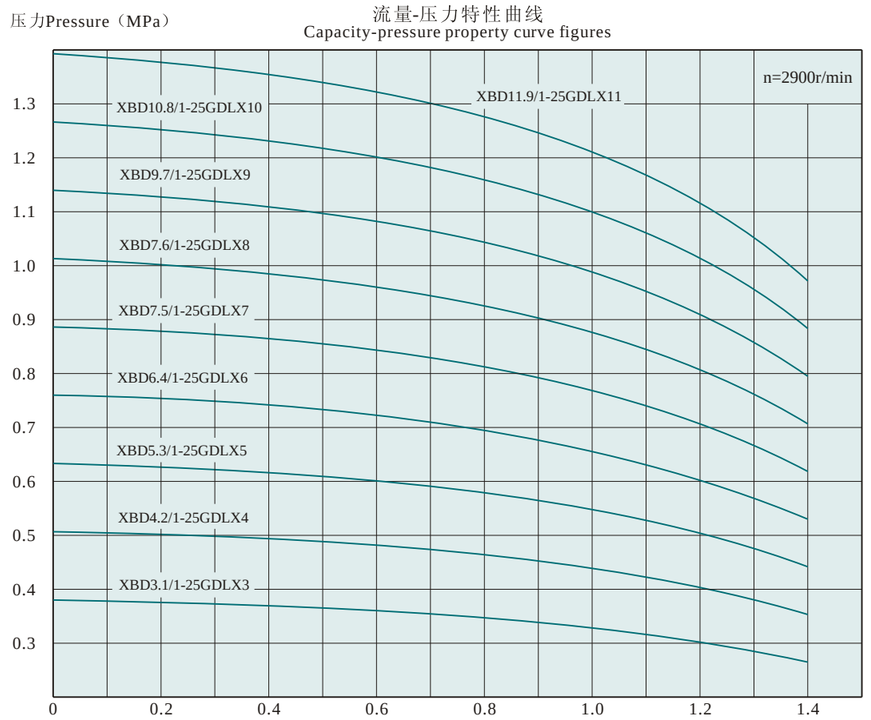

流量-轴功率特性曲线（单级）
Capacity-shaft power property curve figures(single-stage)

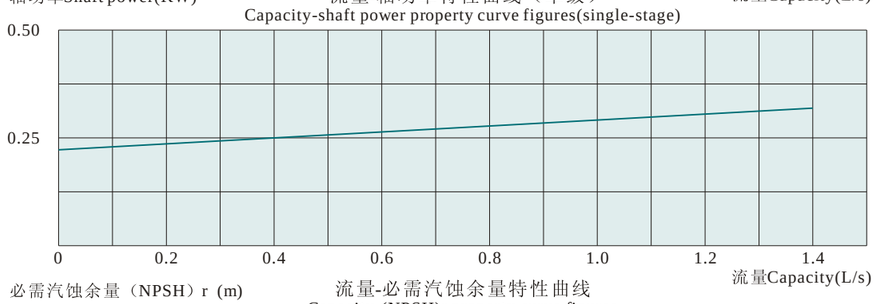

流量-必需汽蚀余量特性曲线
Capacity-(NPSH)r property curve figures

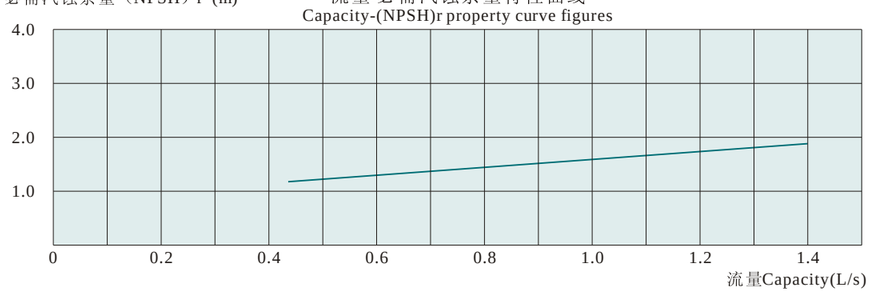

性能参数表 Performance table

泵型号 Pump type	流量 Capacity (L/S)	流量 Capacity (M^3/h)	压力 Pressure (MPa)	功率 Power (kW)	转速 Speed (r/min)	必需汽蚀余量 (NPSH)r (m)	重量 Weight (kg)
XBD3.1/1-25GDL×3	0.78 1 1.33	2.8 3.6 4.8	0.35 0.31 0.28	1.1	2900	1.4 1.6 1.8	58
XBD4.2/1-25GDL×4	0.78 1 1.33	2.8 3.6 4.8	0.47 0.42 0.37	1.5	2900	1.4 1.6 1.8	65
XBD5.3/1-25GDL×5	0.78 1 1.33	2.8 3.6 4.8	0.59 0.53 0.47	2.2	2900	1.4 1.6 1.8	72
XBD6.4/1-25GDL×6	0.78 1 1.33	2.8 3.6 4.8	0.71 0.64 0.56	2.2	2900	1.4 1.6 1.8	76
XBD7.5/1-25GDL×7	0.78 1 1.33	2.8 3.6 4.8	0.83 0.75 0.66	3	2900	1.4 1.6 1.8	86
XBD8.6/1-25GDL×8	0.78 1 1.33	2.8 3.6 4.8	0.95 0.86 0.75	3	2900	1.4 1.6 1.8	90
XBD9.7/1-25GDL×9	0.78 1 1.33	2.8 3.6 4.8	1.09 0.97 0.85	4	2900	1.4 1.6 1.8	94
XBD10.8/1-25GDL×10	0.78 1 1.33	2.8 3.6 4.8	1.19 1.08 0.94	4	2900	1.4 1.6 1.8	110
XBD11.9/1-25GDL×11	0.78 1 1.33	2.8 3.6 4.8	1.29 1.19 1.02	5.5	2900	1.4 1.6 1.8	114

具有特定性能参数的泵，经本公司技术部门认可后可供货。
The pump of specific parameters can be supplied after being approved by the technical department of this company.

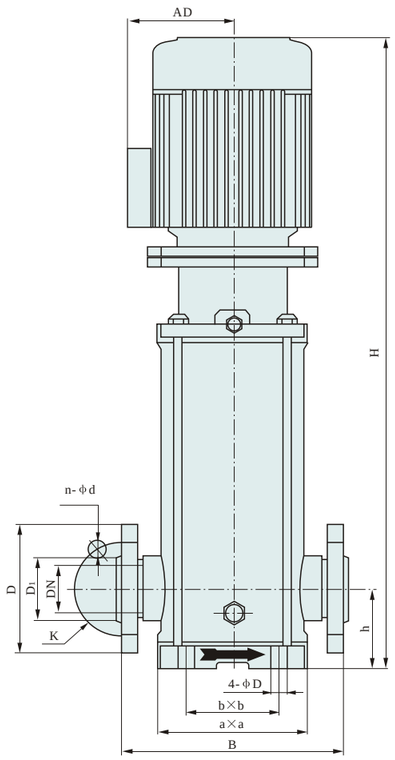

外形及安装尺寸表 External and installation dimension table

泵型号 Pump type	外形及安装尺寸 Figure and installing dimensions							进出口法兰尺寸 Flange dimensions				
	H	a×a	b×b	B	h	4-ϕD	AD	DN	K	D	D_1	n-ϕd
XBD3.1/1-25GDL×3	615	235×235	200×200	300	80	4-ϕ14	160	ϕ25	ϕ85	ϕ115	ϕ65	4-ϕ14
XBD4.2/1-25GDL×4	675	235×235	200×200	300	80	4-ϕ14	160	ϕ25	ϕ85	ϕ115	ϕ65	4-ϕ14
XBD5.3/1-25GDL×5	745	235×235	200×200	300	80	4-ϕ14	180	ϕ25	ϕ85	ϕ115	ϕ65	4-ϕ14
XBD6.4/1-25GDL×6	785	235×235	200×200	300	80	4-ϕ14	180	ϕ25	ϕ85	ϕ115	ϕ65	4-ϕ14
XBD7.5/1-25GDL×7	870	235×235	200×200	300	80	4-ϕ14	180	ϕ25	ϕ85	ϕ115	ϕ65	4-ϕ14
XBD8.6/1-25GDL×8	910	235×235	200×200	300	80	4-ϕ14	180	ϕ25	ϕ85	ϕ115	ϕ65	4-ϕ14
XBD9.7/1-25GDL×9	950	235×235	200×200	300	80	4-ϕ14	190	ϕ25	ϕ85	ϕ115	ϕ65	4-ϕ14
XBD10.8/1-25GDL×10	990	235×235	200×200	300	80	4-ϕ14	190	ϕ25	ϕ85	ϕ115	ϕ65	4-ϕ14
XBD11.9/1-25GDL×11	1024	235×235	200×200	300	80	4-ϕ14	210	ϕ25	ϕ85	ϕ115	ϕ65	4-ϕ14

XBD–GDL系列电动消防泵组性能曲线图 XBD–GDL series electric fire–fighting pump group property curve figures

压力Pressure（MPa）

流量-压力特性曲线
Capacity-pressure property curve figures

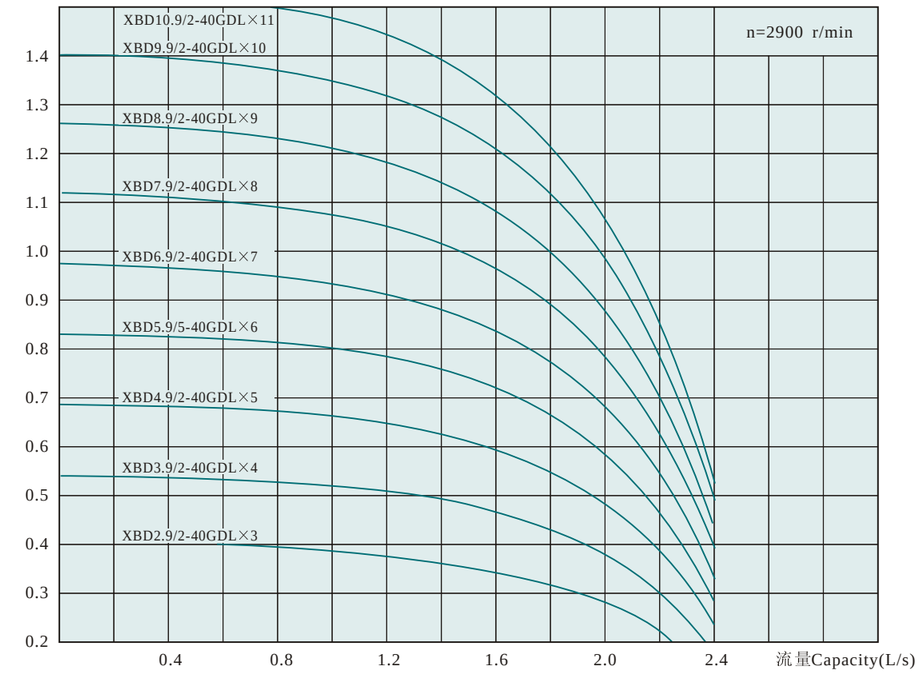

轴功率Shaft power(KW)

流量-轴功率特性曲线（单级）
Capacity-shaft power property curve figures(single-stage)

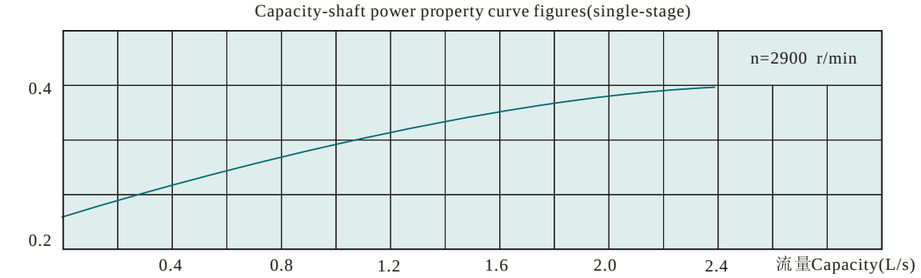

必需汽蚀余量（NPSH）r (m)

流量-必需汽蚀余量特性曲线
Capacity-(NPSH)r property curve figures

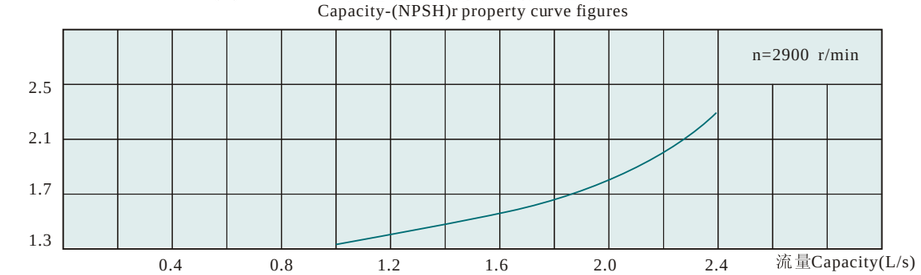

性能参数表 Performance table

泵型号 Pump type	流量 Capacity (L/S)	流量 Capacity (m^3/h)	压力 Pressure (MPa)	功率 Power (kW)	转速 Speed (r/min)	必需汽蚀余量 (NPSH)r (m)	重量 Weight (kg)
XBD2.9/2-40GDL×3	1.2 2 2.2	4.3 7.2 7.9	0.35 0.29 0.26	1.5	2900	1.4 1.8 2.3	72
XBD3.9/2-40GDL×4	1.2 2 2.2	4.3 7.2 7.9	0.48 0.39 0.33	2.2	2900	1.4 1.8 2.3	78
XBD4.9/2-40GDL×5	1.2 2 2.2	4.3 7.2 7.9	0.60 0.49 0.40	2.2	2900	1.4 1.8 2.3	82
XBD5.9/2-40GDL×6	1.2 2 2.2	4.3 7.2 7.9	0.71 0.59 0.50	3	2900	1.4 1.8 2.3	92
XBD6.9/2-40GDL×7	1.2 2 2.2	4.3 7.2 7.9	0.85 0.69 0.60	3	2900	1.4 1.8 2.3	96
XBD7.9/2-40GDL×8	1.2 2 2.2	4.3 7.2 7.9	0.94 0.79 0.70	4	2900	1.4 1.8 2.3	112
XBD8.9/2-40GDL×9	1.2 2 2.2	4.3 7.2 7.9	1.07 0.89 0.80	5.5	2900	1.4 1.8 2.3	116
XBD9.9/2-40GDL×10	1.2 2 2.2	4.3 7.2 7.9	1.20 0.99 0.80	5.5	2900	1.4 1.8 2.3	120
XBD10.9/2-40GDL×11	1.2 2 2.2	4.3 7.2 7.9	1.31 1.09 1.02	5.5	2900	1.4 1.8 2.3	140

具有特定性能参数的泵，经本公司技术部门认可后可供货。
The pump of specific parameters can be supplied after being approved by the technical department of this company.

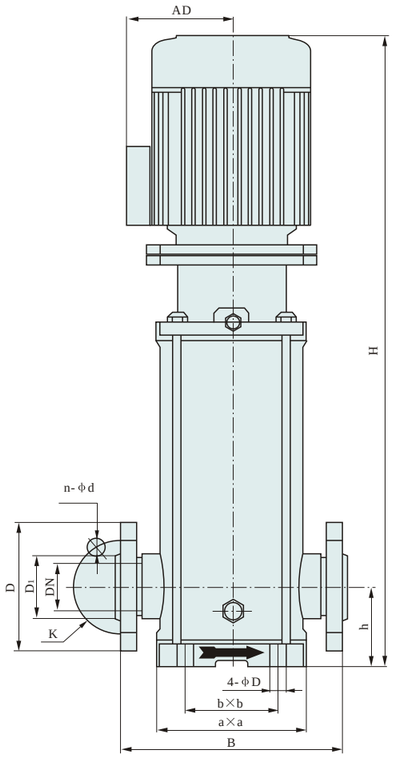

外形及安装尺寸表 External and installation dimension table

泵型号 Pump type	外形及安装尺寸 Figure and installing dimensions							进出口法兰尺寸 Flange dimensions				
	H	a×a	b×b	B	h	4-ϕD	AD	DN	K	D	D_1	n-ϕd
XBD2.9/2-40GDL×3	699	237×237	205×205	330	85	4-ϕ14	160	ϕ40	ϕ110	ϕ150	ϕ84	4-ϕ18
XBD3.9/2-40GDL×4	765	237×237	205×205	330	85	4-ϕ14	180	ϕ40	ϕ110	ϕ150	ϕ84	4-ϕ18
XBD4.9/2-40GDL×5	806	237×237	205×205	330	85	4-ϕ14	180	ϕ40	ϕ110	ϕ150	ϕ84	4-ϕ18
XBD5.9/2-40GDL×6	892	237×237	205×205	330	85	4-ϕ14	180	ϕ40	ϕ110	ϕ150	ϕ84	4-ϕ18
XBD6.9/2-40GDL×7	933	237×237	205×205	330	85	4-ϕ14	180	ϕ40	ϕ110	ϕ150	ϕ84	4-ϕ18
XBD7.9/2-40GDL×8	996	237×237	205×205	330	85	4-ϕ14	190	ϕ40	ϕ110	ϕ150	ϕ84	4-ϕ18
XBD8.9/2-40GDL×9	1037	237×237	205×205	330	85	4-ϕ14	190	ϕ40	ϕ110	ϕ150	ϕ84	4-ϕ18
XBD9.9/2-40GDL×10	1078	237×237	205×205	330	85	4-ϕ14	210	ϕ40	ϕ110	ϕ150	ϕ84	4-ϕ18
XBD10.9/2-40GDL×11	1192	237×237	205×205	330	85	4-ϕ14	210	ϕ40	ϕ110	ϕ150	ϕ84	4-ϕ18

XBD–GDL系列电动消防泵组性能曲线图 XBD–GDL series electric fire–fighting pump group property curve figures

流量-压力特性曲线
Capacity-pressure property curve figures

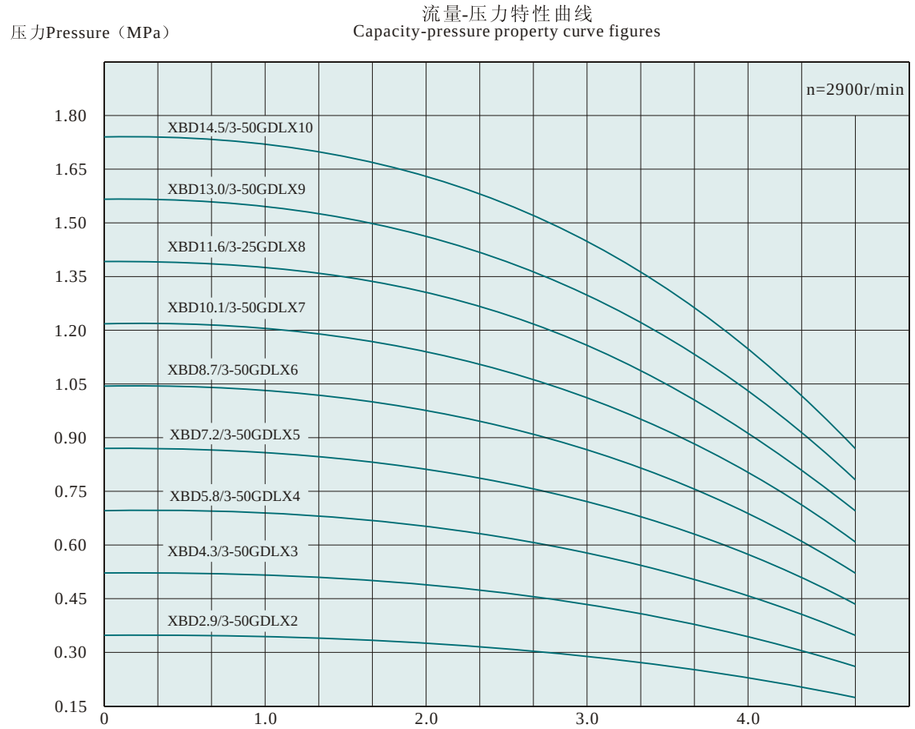

流量-轴功率特性曲线（单级）
Capacity-shaft power property curve figures(single-stage)

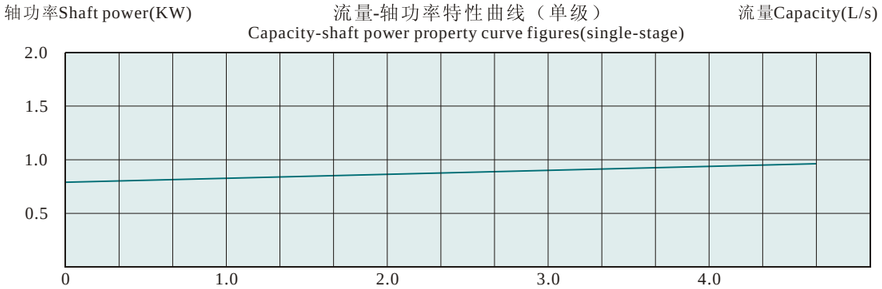

流量-必需汽蚀余量特性曲线
Capacity-(NPSH)r property curve figures

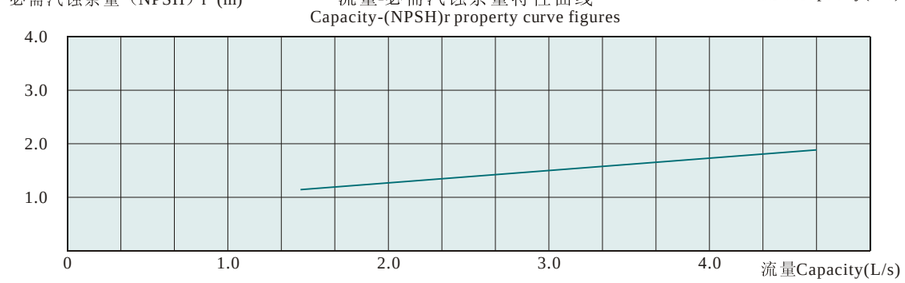

性能参数表 Performance table

泵型号 Pump type	流量 Capacity (L/S)	流量 Capacity (m^3/h)	压力 Pressure (MPa)	功率 Power (kW)	转速 Speed (r/min)	必需汽蚀余量 (NPSH)r (m)	重量 Weight (kg)
XBD2.9/3-50GDL×2	2.3 3 4.0	8.3 10.8 14.4	0.34 0.29 0.23	2.2	2900	1.4 1.7 1.8	113
XBD4.3/3-50GDL×3	2.3 3 4.0	8.3 10.8 14.4	0.51 0.43 0.34	4	2900	1.4 1.7 1.8	129
XBD5.8/3-50GDL×4	2.3 3 4.0	8.3 10.8 14.4	0.68 0.58 0.46	4	2900	1.4 1.7 1.8	149
XBD7.2/3-50GDL×5	2.3 3 4.0	8.3 10.8 14.4	0.85 0.72 0.57	5.5	2900	1.4 1.7 1.8	181
XBD8.7/3-50GDL×6	2.3 3 4.0	8.3 10.8 14.4	1.0 0.87 0.69	7.5	2900	1.4 1.7 1.8	190
XBD10.1/3-50GDL×7	2.3 3 4.0	8.3 10.8 14.4	1.19 1.01 0.80	7.5	2900	1.4 1.7 1.8	204
XBD11.6/3-50GDL×8	2.3 3 4.0	8.3 10.8 14.4	1.36 1.16 0.92	11	2900	1.4 1.7 1.8	212
XBD13.0/3-50GDL×9	2.3 3 4.0	8.3 10.8 14.4	1.53 1.30 1.03	11	2900	1.4 1.7 1.8	265
XBD14.5/3-50GDL×10	2.3 3 4.0	8.3 10.8 14.4	1.70 1.45 1.15	11	2900	1.4 1.7 1.8	273

具有特定性能参数的泵，经本公司技术部门认可后可供货。

The pump of specific parameters can be supplied after being approved by the technical department of this company.

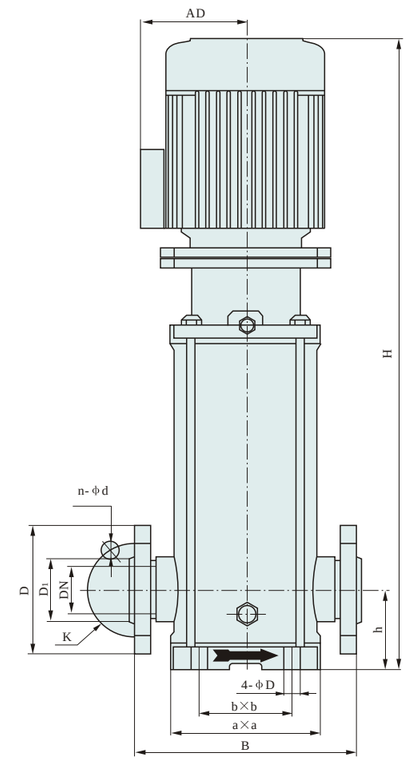

外形及安装尺寸表 External and installation dimension table

泵型号 Pump type	外形及安装尺寸 Figure and installing dimensions							进出口法兰尺寸 Flange dimensions				
	H	a×a	b×b	B	h	4-ϕD	AD	DN	K	D	D_1	n-ϕd
XBD2.9/3-50GDL×2	771	270×270	235×235	360	102	4-ϕ18	160	ϕ50	ϕ125	ϕ160	ϕ99	4-ϕ18
XBD4.3/3-50GDL×3	891	270×270	235×235	360	102	4-ϕ18	180	ϕ50	ϕ125	ϕ160	ϕ99	4-ϕ18
XBD5.8/3-50GDL×4	986	270×270	235×235	360	102	4-ϕ18	190	ϕ50	ϕ125	ϕ160	ϕ99	4-ϕ18
XBD7.2/3-50GDL×5	1136	270×270	235×235	360	102	4-ϕ18	210	ϕ50	ϕ125	ϕ160	ϕ99	4-ϕ18
XBD8.7/3-50GDL×6	1211	270×270	235×235	360	102	4-ϕ18	210	ϕ50	ϕ125	ϕ160	ϕ99	4-ϕ18
XBD10.1/3-50GDL×7	1326	270×270	235×235	360	102	4-ϕ18	210	ϕ50	ϕ125	ϕ160	ϕ99	4-ϕ18
XBD11.6/3-50GDL×8	1401	270×270	235×235	360	102	4-ϕ18	210	ϕ50	ϕ125	ϕ160	ϕ99	4-ϕ18
XBD13.0/3-50GDL×9	1561	270×270	235×235	360	102	4-ϕ18	255	ϕ50	ϕ125	ϕ160	ϕ99	4-ϕ18
XBD14.5/3-50GDL×10	1636	270×270	235×235	360	102	4-ϕ18	255	ϕ50	ϕ125	ϕ160	ϕ99	4-ϕ18

XBD–GDL系列电动消防泵组性能曲线图 XBD–GDL series electric fire–fighting pump group property curve figures

压力Pressure（MPa）

流量-压力特性曲线
Capacity-pressure property curve figures

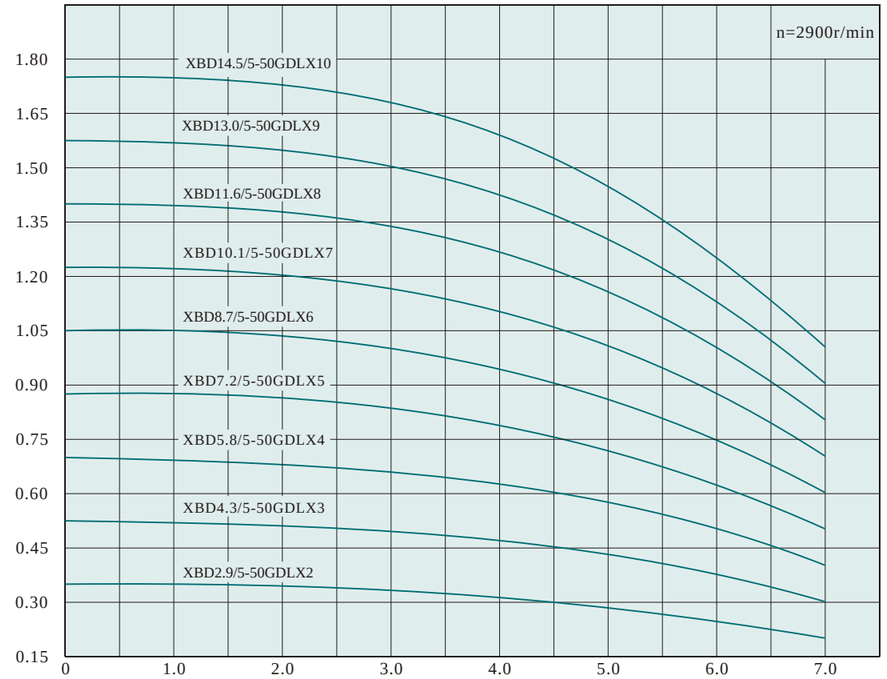

轴功率Shaft power(KW)　　流量-轴功率特性曲线（单级）　　流量Capacity(L/s)

Capacity-shaft power property curve figures(single-stage)

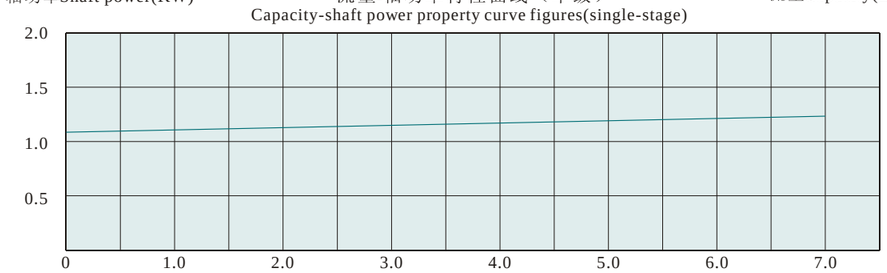

必需汽蚀余量（NPSH）r (m)　　流量-必需汽蚀余量特性曲线　　流量Capacity(L/s)

Capacity-(NPSH)r property curve figures

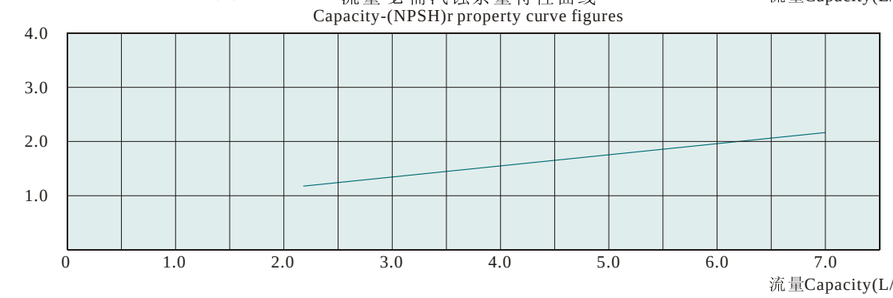

流量Capacity(L/s)

性能参数表 Performance table

泵型号 Pump type	流量 Capacity (L/S)	流量 Capacity (m^3/h)	压力 Pressure (MPa)	功率 Power (kW)	转速 Speed (r/min)	必需汽蚀余量 (NPSH)r (m)	重量 Weight (kg)
XBD2.9/5-50GDL×2	3.5 5.0 6.0	12.6 18.0 21.6	0.35 0.29 0.24	3	2900	1.4 1.7 1.9	122
XBD4.3/5-50GDL×3	3.5 5.0 6.0	12.6 18.0 21.6	0.52 0.43 0.36	4	2900	1.4 1.7 1.9	142
XBD5.8/5-50GDL×4	3.5 5.0 6.0	12.6 18.0 21.6	0.70 0.58 0.49	5.5	2900	1.4 1.7 1.9	175
XBD7.2/5-50GDL×5	3.5 5.0 6.0	12.6 18.0 21.6	0.88 0.72 0.61	7.5	2900	1.4 1.7 1.9	189
XBD8.7/5-50GDL×6	3.5 5.0 6.0	12.6 18.0 21.6	1.05 0.87 0.73	7.5	2900	1.4 1.7 1.9	198
XBD10.1/5-50GDL×7	3.5 5.0 6.0	12.6 18.0 21.6	1.23 1.01 0.80	11	2900	1.4 1.7 1.9	252
XBD11.6/5-50GDL×8	3.5 5.0 6.0	12.6 18.0 21.6	1.41 1.16 0.98	11	2900	1.4 1.7 1.9	261
XBD13.0/5-50GDL×9	3.5 5.0 6.0	12.6 18.0 21.6	1.58 1.30 1.10	15	2900	1.4 1.7 1.9	280
XBD14.5/5-50GDL×10	3.5 5.0 6.0	12.6 18.0 21.6	1.76 1.45 1.22	15	2900	1.4 1.7 1.9	289

具有特定性能参数的泵，经本公司技术部门认可后可供货。

The pump of specific parameters can be supplied after being approved by the technical department of this company.

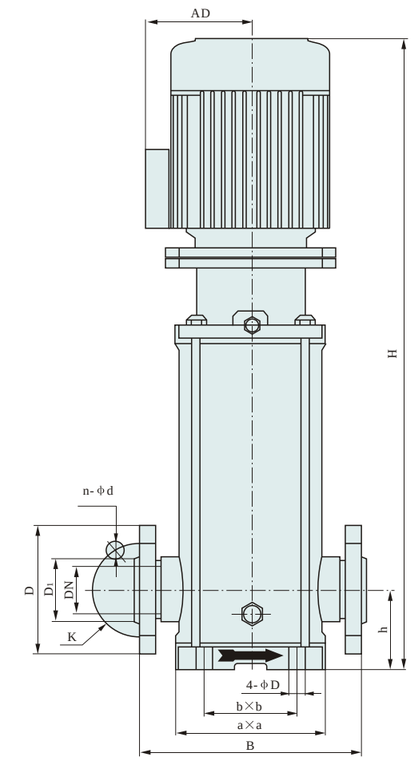

外形及安装尺寸表 External and installation dimension table

泵型号 Pump type	外形及安装尺寸 Figure and installing dimensions							进出口法兰尺寸 Flange dimensions				
	H	a×a	b×b	B	h	4-ϕD	AD	DN	K	D	D_1	n-ϕd
XBD2.9/5-50GDL×2	816	270×270	235×235	360	102	4-ϕ18	180	ϕ50	ϕ125	ϕ160	ϕ99	4-ϕ18
XBD4.3/5-50GDL×3	911	270×270	235×235	360	102	4-ϕ18	190	ϕ50	ϕ125	ϕ160	ϕ99	4-ϕ18
XBD5.8/5-50GDL×4	1061	270×270	235×235	360	102	4-ϕ18	210	ϕ50	ϕ125	ϕ160	ϕ99	4-ϕ18
XBD7.2/5-50GDL×5	1136	270×270	235×235	360	102	4-ϕ18	210	ϕ50	ϕ125	ϕ160	ϕ99	4-ϕ18
XBD8.7/5-50GDL×6	1211	270×270	235×235	360	102	4-ϕ18	210	ϕ50	ϕ125	ϕ160	ϕ99	4-ϕ18
XBD10.1/5-50GDL×7	1451	270×270	235×235	360	102	4-ϕ18	255	ϕ50	ϕ125	ϕ160	ϕ99	4-ϕ18
XBD11.6/5-50GDL×8	1526	270×270	235×235	360	102	4-ϕ18	255	ϕ50	ϕ125	ϕ160	ϕ99	4-ϕ18
XBD13.0/5-50GDL×9	1561	270×270	235×235	360	102	4-ϕ18	255	ϕ50	ϕ125	ϕ160	ϕ99	4-ϕ18
XBD14.5/5-50GDL×10	1636	270×270	235×235	360	102	4-ϕ18	255	ϕ50	ϕ125	ϕ160	ϕ99	4-ϕ18

XBD–GDL系列电动消防泵组性能曲线图 XBD–GDL series electric fire–fighting pump group property curve figures

压力Pressure（MPa）

流量-压力特性曲线
Capacity-pressure property curve figures

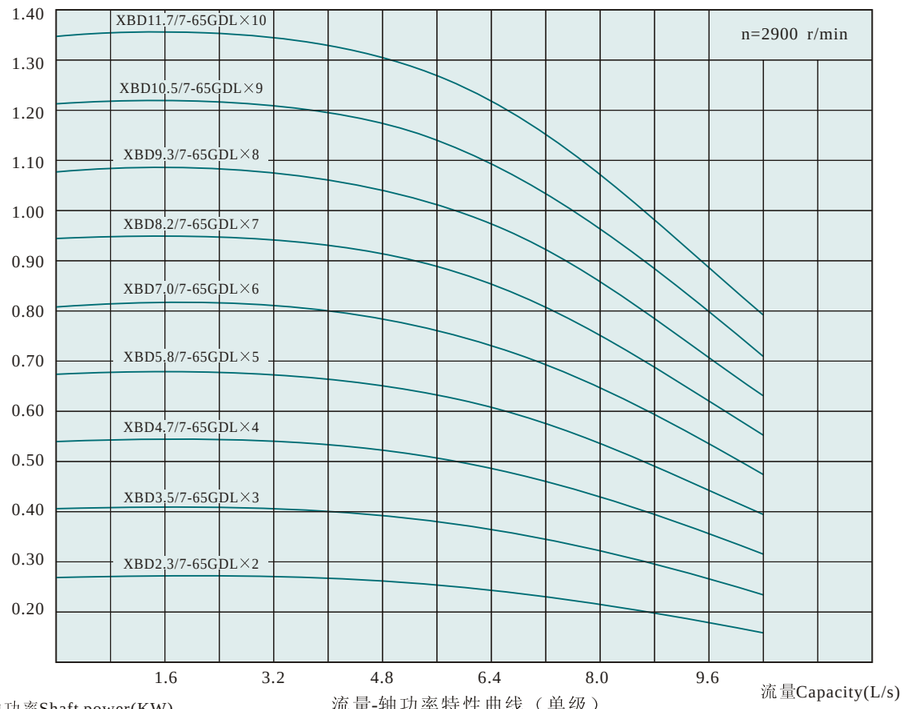

轴功率Shaft power(KW)

流量-轴功率特性曲线（单级）
Capacity-shaft power property curve figures(single-stage)

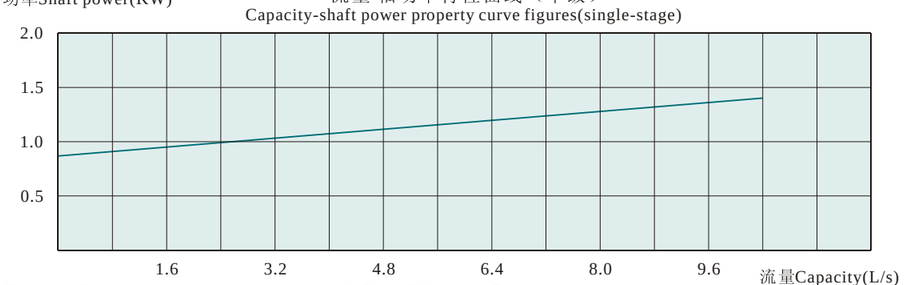

必需汽蚀余量（NPSH）r (m)

流量-必需汽蚀余量特性曲线
Capacity-(NPSH)r property curve figures

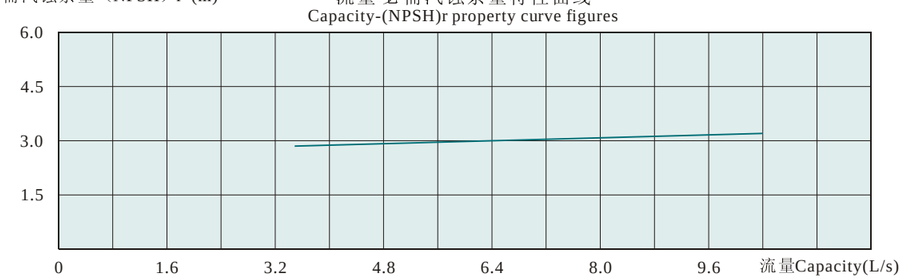

性能参数表 Performance table

泵型号 Pump type	流量 Capacity (L/S)	流量 Capacity (m^3/h)	压力 Pressure (MPa)	功率 Power (kW)	转速 Speed (r/min)	必需汽蚀余量 (NPSH)r (m)	重量 Weight (kg)
XBD2.3/7-65GDL×2	4.6 7.0 8.0	16.5 25.2 28.8	0.26 0.23 0.21	3	2900	2.9 3.0 3.1	131
XBD3.5/7-65GDL×3	4.6 7.0 8.0	16.5 25.2 28.8	0.40 0.35 0.32	4	2900	2.9 3.0 3.1	153
XBD4.7/7-65GDL×4	4.6 7.0 8.0	16.5 25.2 28.8	0.52 0.47 0.43	5.5	2900	2.9 3.0 3.1	182
XBD5.8/7-65GDL×5	4.6 7.0 8.0	16.5 25.2 28.8	0.66 0.58 0.53	7.5	2900	2.9 3.0 3.1	198
XBD7.0/7-65GDL×6	4.6 7.0 8.0	16.5 25.2 28.8	0.79 0.70 0.64	11	2900	2.9 3.0 3.1	214
XBD8.2/7-65GDL×7	4.6 7.0 8.0	16.5 25.2 28.8	0.92 0.82 0.75	11	2900	2.9 3.0 3.1	263
XBD9.3/7-65GDL×8	4.6 7.0 8.0	16.5 25.2 28.8	1.05 0.93 0.86	11	2900	2.9 3.0 3.1	273
XBD10.5/7-65GDL×9	4.6 7.0 8.0	16.5 25.2 28.8	1.18 1.05 0.96	15	2900	2.9 3.0 3.1	293
XBD11.7/7-65GDL×10	4.6 7.0 8.0	16.5 25.2 28.8	1.31 1.17 1.07	15	2900	2.9 3.0 3.1	303

具有特定性能参数的泵，经本公司技术部门认可后可供货。

The pump of specific parameters can be supplied after being approved by the technical department of this company.

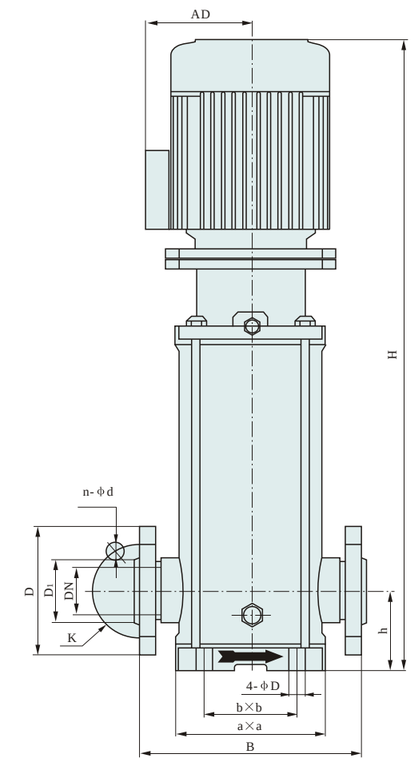

外形及安装尺寸表 External and installation dimension table

泵型号 Pump type	外形及安装尺寸 Figure and installing dimensions							进出口法兰尺寸 Flange dimensions				
	H	a×a	b×b	B	h	4-ΦD	AD	DN	K	D	D_1	n-Φd
XBD2.3/7-65GDL×2	878	270×270	235×235	360	110	4-Φ18	180	Φ65	Φ145	Φ185	Φ118	4-Φ18
XBD3.5/7-65GDL×3	923	270×270	235×235	360	110	4-Φ18	190	Φ65	Φ145	Φ185	Φ118	4-Φ18
XBD4.7/7-65GDL×4	1073	270×270	235×235	360	110	4-Φ18	210	Φ65	Φ145	Φ185	Φ118	4-Φ18
XBD5.8/7-65GDL×5	1148	270×270	235×235	360	110	4-Φ18	210	Φ65	Φ145	Φ185	Φ118	4-Φ18
XBD7.0/7-65GDL×6	1223	270×270	235×235	360	110	4-Φ18	210	Φ65	Φ145	Φ185	Φ118	4-Φ18
XBD8.2/7-65GDL×7	1423	270×270	235×235	360	110	4-Φ18	255	Φ65	Φ145	Φ185	Φ118	4-Φ18
XBD9.3/7-65GDL×8	1498	270×270	235×235	360	110	4-Φ18	255	Φ65	Φ145	Φ185	Φ118	4-Φ18
XBD10.5/7-65GDL×9	1573	270×270	235×235	360	110	4-Φ18	255	Φ65	Φ145	Φ185	Φ118	4-Φ18
XBD11.7/7-65GDL×10	1648	270×270	235×235	360	110	4-Φ18	255	Φ65	Φ145	Φ185	Φ118	4-Φ18

XBD–GDL系列电动消防泵组性能曲线图 XBD–GDL series electric fire–fighting pump group property curve figures

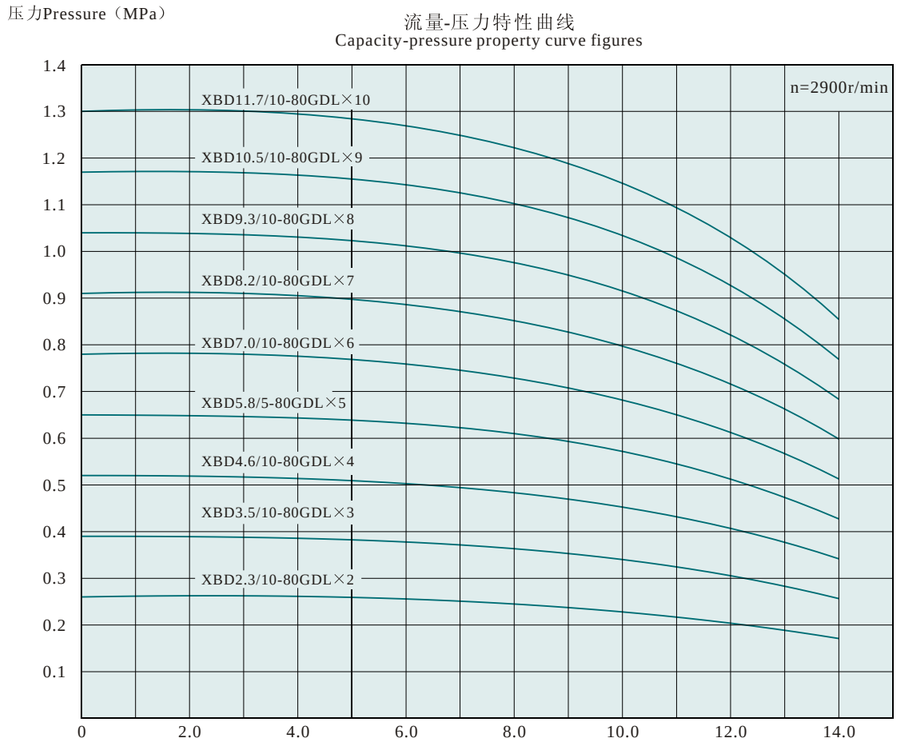

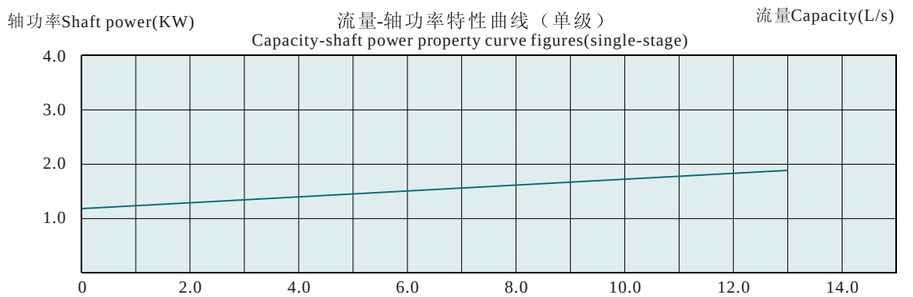

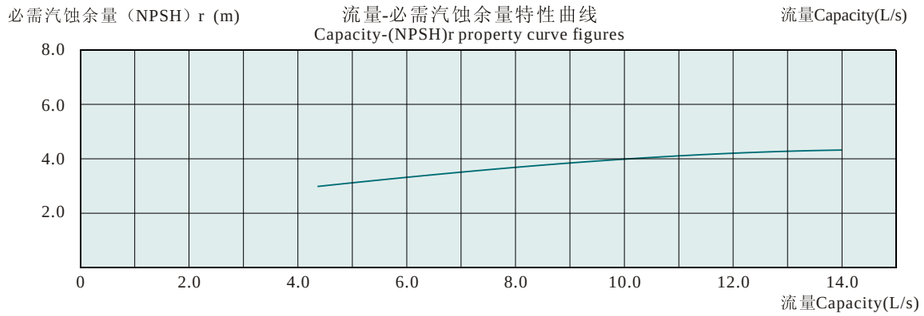

性能参数表 Performance table

泵型号 Pump type	流量 Capacity (L/S)	流量 Capacity (m^3/h)	压力 Pressure (MPa)	功率 Power (kW)	转速 Speed (r/min)	必需汽蚀余量 (NPSH)r (m)	重量 Weight (kg)
XBD2.3/10-80GDL×2	7.0 10.0 12.0	25.2 36.0 43.2	0.26 0.23 0.21	4	2900	3.5 4.0 4.2	193
XBD3.5/10-80GDL×3	7.0 10.0 12.0	25.2 36.0 43.2	0.39 0.35 0.32	7.5	2900	3.5 4.0 4.2	227
XBD4.6/10-80GDL×4	7.0 10.0 12.0	25.2 36.0 43.2	0.52 0.46 0.42	11	2900	3.5 4.0 4.2	244
XBD5.8/10-80GDL×5	7.0 10.0 12.0	25.2 36.0 43.2	0.65 0.58 0.52	11	2900	3.5 4.0 4.2	292
XBD7.0/10-80GDL×6	7.0 10.0 12.0	25.2 36.0 43.2	0.79 0.70 0.62	15	2900	3.5 4.0 4.2	302
XBD8.2/10-80GDL×7	7.0 10.0 12.0	25.2 36.0 43.2	0.92 0.82 0.72	15	2900	3.5 4.0 4.2	322
XBD9.3/10-80GDL×8	7.0 10.0 12.0	25.2 36.0 43.2	1.05 0.93 0.82	18.5	2900	3.5 4.0 4.2	332
XBD10.5/10-80GDL×9	7.0 10.0 12.0	25.2 36.0 43.2	1.17 1.05 0.92	22	2900	3.5 4.0 4.2	365
XBD11.7/10-80GDL×10	7.0 10.0 12.0	25.2 36.0 43.2	1.31 1.17 1.02	22	2900	3.5 4.0 4.2	375

具有特定性能参数的泵，经本公司技术部门认可后可供货。

The pump of specific parameters can be supplied after being approved by the technical department of this company.

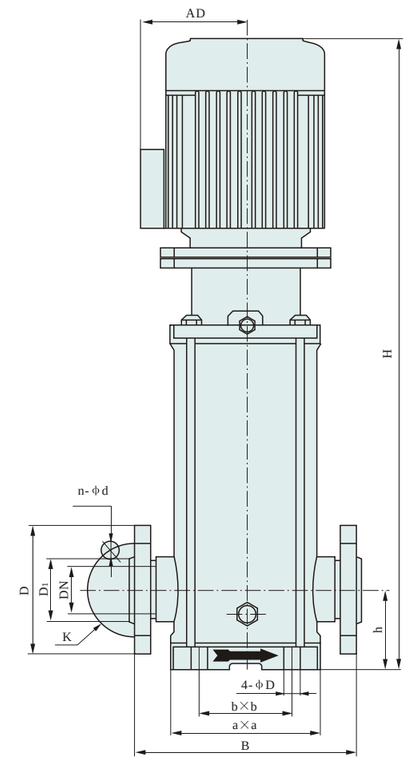

外形及安装尺寸表 External and installation dimension table

泵型号 Pump type	外形及安装尺寸 Figure and installing dimensions							进出口法兰尺寸 Flange dimensions				
	H	a×a	b×b	B	h	4-ϕD	AD	DN	K	D	D_1	n-ϕd
XBD2.3/10-80GDL×2	898	336×336	300×300	420	130	4-ϕ18	190	ϕ80	ϕ160	ϕ200	ϕ132	8-ϕ18
XBD3.5/10-80GDL×3	998	336×336	300×300	420	130	4-ϕ18	210	ϕ80	ϕ160	ϕ200	ϕ132	8-ϕ18
XBD4.6/10-80GDL×4	1073	336×336	300×300	420	130	4-ϕ18	210	ϕ80	ϕ160	ϕ200	ϕ132	8-ϕ18
XBD5.8/10-80GDL×5	1273	336×336	300×300	420	130	4-ϕ18	255	ϕ80	ϕ160	ϕ200	ϕ132	8-ϕ18
XBD7.0/10-80GDL×6	1358	336×336	300×300	420	130	4-ϕ18	255	ϕ80	ϕ160	ϕ200	ϕ132	8-ϕ18
XBD8.2/10-80GDL×7	1423	336×336	300×300	420	130	4-ϕ18	255	ϕ80	ϕ160	ϕ200	ϕ132	8-ϕ18
XBD9.3/10-80GDL×8	1498	336×336	300×300	420	130	4-ϕ18	255	ϕ80	ϕ160	ϕ200	ϕ132	8-ϕ18
XBD10.5/10-80GDL×9	1618	336×336	300×300	420	130	4-ϕ18	255	ϕ80	ϕ160	ϕ200	ϕ132	8-ϕ18
XBD11.7/10-80GDL×10	1701	336×336	300×300	420	130	4-ϕ18	285	ϕ80	ϕ160	ϕ200	ϕ132	8-ϕ18

XBD–GDL系列电动消防泵组性能曲线图 XBD–GDL series electric fire–fighting pump group property curve figures

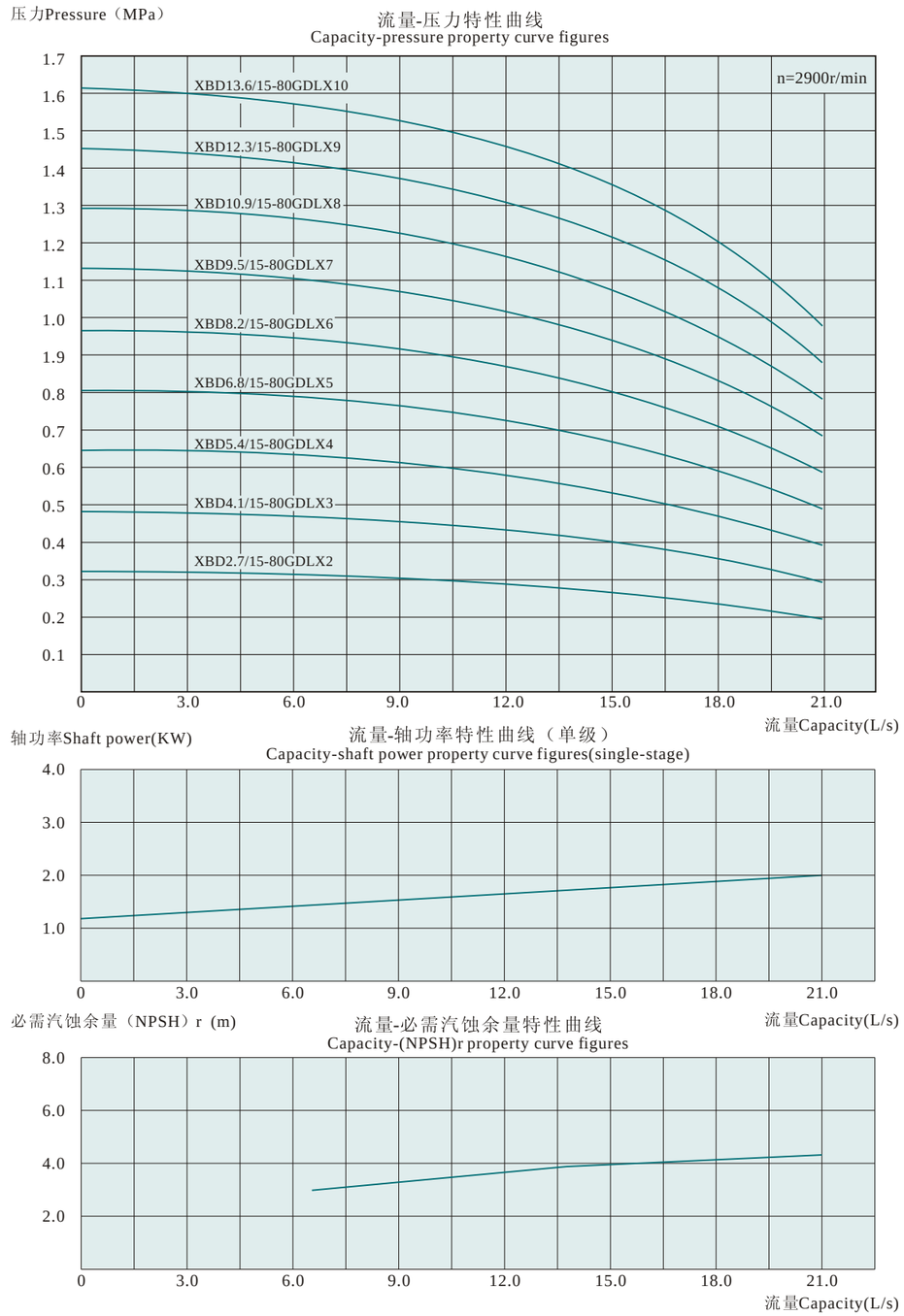

性能参数表 Performance table

泵型号 Pump type	流量 Capacity (L/S)	流量 Capacity (m^3/h)	压力 Pressure (MPa)	功率 Power (kW)	转速 Speed (r/min)	必需汽蚀余量 (NPSH)r (m)	重量 Weight (kg)
XBD2.7/15-80GDL×2	10.5 15.0 18.0	37.8 54.0 64.8	0.31 0.27 0.24	7.5	2900	3.7 4.0 4.2	218
XBD4.1/15-80GDL×3	10.5 15.0 18.0	37.8 54.0 64.8	0.47 0.39 0.28	11	2900	3.7 4.0 4.2	267
XBD5.4/15-80GDL×4	10.5 15.0 18.0	37.8 54.0 64.8	0.68 0.52 0.37	15	2900	3.7 4.0 4.2	287
XBD6.8/15-80GDL×5	10.5 15.0 18.0	37.8 54.0 64.8	0.85 0.66 0.47	18.5	2900	3.7 4.0 4.2	320
XBD8.2/15-80GDL×6	10.5 15.0 18.0	37.8 54.0 64.8	0.98 0.79 0.57	22	2900	3.7 4.0 4.2	330
XBD9.5/15-80GDL×7	10.5 15.0 18.0	37.8 54.0 64.8	1.19 0.92 0.65	22	2900	3.7 4.0 4.2	373
XBD10.9/15-80GDL×8	10.5 15.0 18.0	37.8 54.0 64.8	1.35 1.05 0.74	30	2900	3.7 4.0 4.2	400
XBD12.3/15-80GDL×9	10.5 15.0 18.0	37.8 54.0 64.8	1.50 1.18 0.85	30	2900	3.7 4.0 4.2	421
XBD13.6/15-80GDL×10	10.5 15.0 18.0	37.8 54.0 64.8	1.68 1.30 0.94	37	2900	3.7 4.0 4.2	432

具有特定性能参数的泵，经本公司技术部门认可后可供货。

The pump of specific parameters can be supplied after being approved by the technical department of this company.

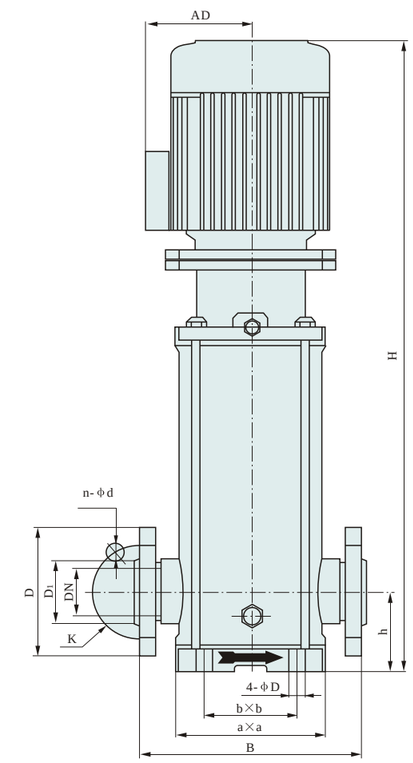

外形及安装尺寸表 External and installation dimension table

泵型号 Pump type	外形及安装尺寸 Figure and installing dimensions							进出口法兰尺寸 Flange dimensions				
	H	a×a	b×b	B	h	4-ϕD	AD	DN	K	D	D_1	n-ϕd
XBD2.7/15-80GDL×2	1051	336×336	300×300	420	130	4-ϕ18	210	ϕ80	ϕ160	ϕ200	ϕ132	8-ϕ18
XBD4.1/15-80GDL×3	1189	336×336	300×300	420	130	4-ϕ18	255	ϕ80	ϕ160	ϕ200	ϕ132	8-ϕ18
XBD5.4/15-80GDL×4	1272	336×336	300×300	420	130	4-ϕ18	255	ϕ80	ϕ160	ϕ200	ϕ132	8-ϕ18
XBD6.8/15-80GDL×5	1400	336×336	300×300	420	130	4-ϕ18	255	ϕ80	ϕ160	ϕ200	ϕ132	8-ϕ18
XBD8.2/15-80GDL×6	1483	336×336	300×300	420	130	4-ϕ18	255	ϕ80	ϕ160	ϕ200	ϕ132	8-ϕ18
XBD9.5/15-80GDL×7	1591	336×336	300×300	420	130	4-ϕ18	285	ϕ80	ϕ160	ϕ200	ϕ132	8-ϕ18
XBD10.9/15-80GDL×8	1779	336×336	300×300	420	130	4-ϕ18	315	ϕ80	ϕ160	ϕ200	ϕ132	8-ϕ18
XBD12.3/15-80GDL×9	1862	336×336	300×300	420	130	4-ϕ18	315	ϕ80	ϕ160	ϕ200	ϕ132	8-ϕ18
XBD13.6/15-80GDL×10	1945	336×336	300×300	420	130	4-ϕ18	345	ϕ80	ϕ160	ϕ200	ϕ132	8-ϕ18

XBD–GDL系列电动消防泵组性能曲线图 XBD–GDL series electric fire–fighting pump group property curve figures

压力Pressure（MPa）

流量-压力特性曲线
Capacity-pressure property curve figures

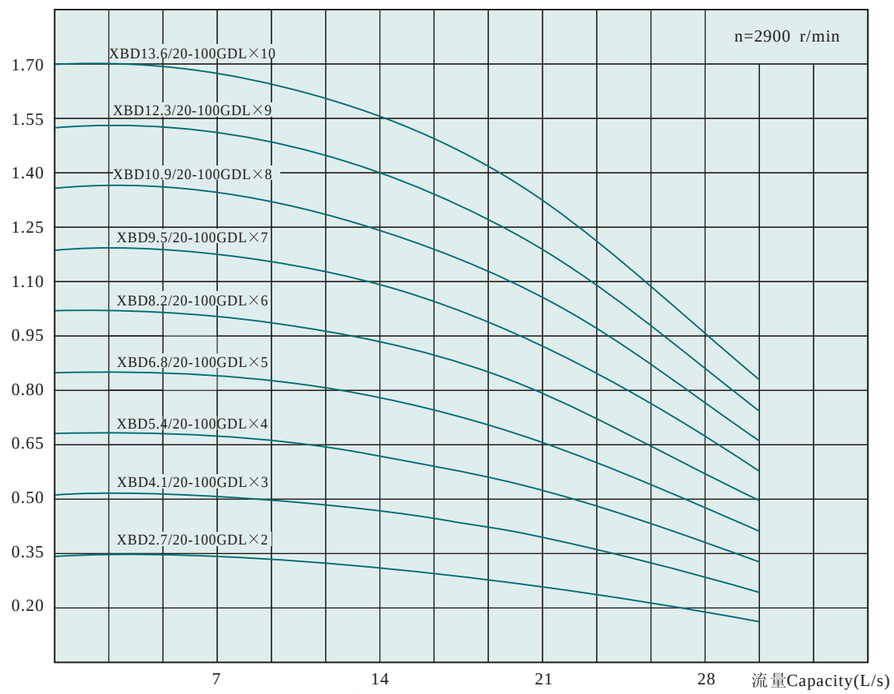

轴功率Shaft power(KW)

流量-轴功率特性曲线（单级）
Capacity-shaft power property curve figures(single-stage)

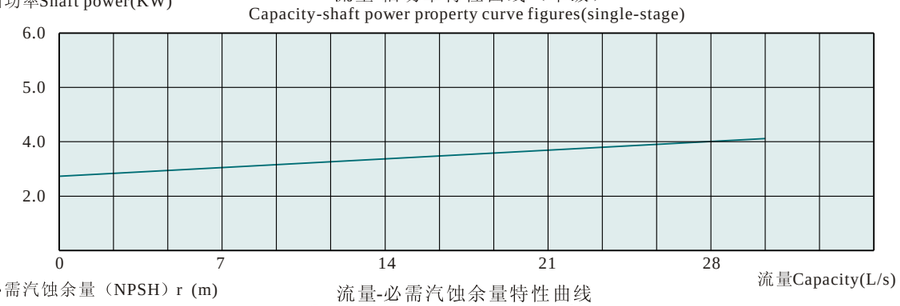

必需汽蚀余量（NPSH）r (m)

流量-必需汽蚀余量特性曲线
Capacity-(NPSH)r property curve figures

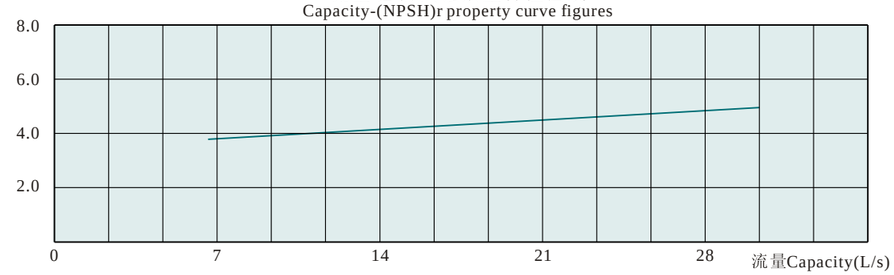

性能参数表 Performance table

泵型号 Pump type	流量 Capacity (L/S)	流量 Capacity (m^3/h)	压力 Pressure (MPa)	功率 Power (kW)	转速 Speed (r/min)	必需汽蚀余量 (NPSH)r (m)	重量 Weight (kg)
XBD2.7/20-100GDL×2	14.0 20.0 24.0	50.4 72.0 86.4	0.31 0.27 0.23	11	2900	4.2 4.5 4.7	276
XBD4.1/20-100GDL×3	14.0 20.0 24.0	50.4 72.0 86.4	0.47 0.41 0.35	15	2900	4.2 4.5 4.7	298
XBD5.4/20-100GDL×4	14.0 20.0 24.0	50.4 72.0 86.4	0.62 0.54 0.47	18.5	2900	4.2 4.5 4.7	336
XBD6.8/20-100GDL×5	14.0 20.0 24.0	50.4 72.0 86.4	0.78 0.68 0.58	22	2900	4.2 4.5 4.7	381
XBD8.2/20-100GDL×6	14.0 20.0 24.0	50.4 72.0 86.4	0.94 0.82 0.70	30	2900	4.2 4.5 4.7	453
XBD9.5/20-100GDL×7	14.0 20.0 24.0	50.4 72.0 86.4	1.09 0.95 0.82	30	2900	4.2 4.5 4.7	466
XBD10.9/20-100GDL×8	14.0 20.0 24.0	50.4 72.0 86.4	1.25 1.09 0.93	37	2900	4.2 4.5 4.7	493
XBD12.3/20-100GDL×9	14.0 20.0 24.0	50.4 72.0 86.4	1.41 1.23 1.05	37	2900	4.2 4.5 4.7	582
XBD13.6/20-100GDL×10	14.0 20.0 24.0	50.4 72.0 86.4	1.56 1.36 1.17	45	2900	4.2 4.5 4.7	595

具有特定性能参数的泵，经本公司技术部门认可后可供货。

The pump of specific parameters can be supplied after being approved by the technical department of this company.

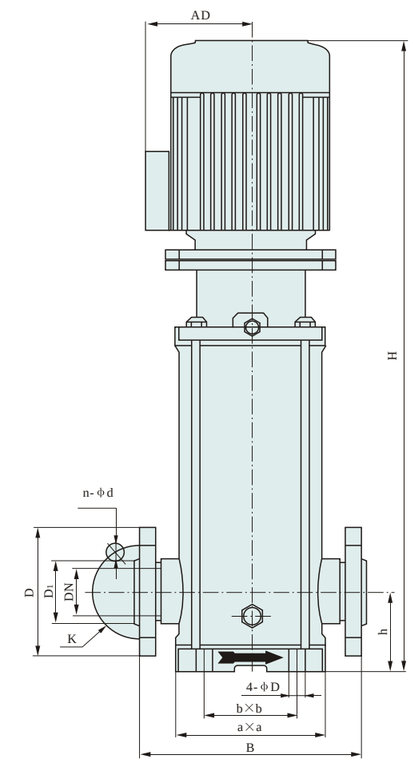

外形及安装尺寸表 External and installation dimension table

泵型号 Pump type	外形及安装尺寸 Figure and installing dimensions							进出口法兰尺寸 Flange dimensions				
	H	a×a	b×b	B	h	4-ϕD	AD	DN	K	D	D1	n-ϕd
XBD2.7/20-100GDL×2	1180	398×398	350×350	520	140	4-ϕ18	255	ϕ100	ϕ180	ϕ220	ϕ156	8-ϕ18
XBD4.1/20-100GDL×3	1277	398×398	350×350	520	140	4-ϕ18	255	ϕ100	ϕ180	ϕ220	ϕ156	8-ϕ18
XBD5.4/20-100GDL×4	1418	398×398	350×350	520	140	4-ϕ18	255	ϕ100	ϕ180	ϕ220	ϕ156	8-ϕ18
XBD6.8/20-100GDL×5	1540	398×398	350×350	520	140	4-ϕ18	285	ϕ100	ϕ180	ϕ220	ϕ156	8-ϕ18
XBD8.2/20-100GDL×6	1741	398×398	350×350	520	140	4-ϕ18	315	ϕ100	ϕ180	ϕ220	ϕ156	8-ϕ18
XBD9.5/20-100GDL×7	1838	398×398	350×350	520	140	4-ϕ18	315	ϕ100	ϕ180	ϕ220	ϕ156	8-ϕ18
XBD10.9/20-100GDL×8	1934	398×398	350×350	520	140	4-ϕ18	315	ϕ100	ϕ180	ϕ220	ϕ156	8-ϕ18
XBD12.3/20-100GDL×9	2031	398×398	350×350	520	140	4-ϕ18	315	ϕ100	ϕ180	ϕ220	ϕ156	8-ϕ18
XBD13.6/20-100GDL×10	2142	398×398	350×350	520	140	4-ϕ18	345	ϕ100	ϕ180	ϕ220	ϕ156	8-ϕ18

XBD–GDL系列电动消防泵组性能曲线图 XBD–GDL series electric fire–fighting pump group property curve figures

流量-压力特性曲线
Capacity-pressure property curve figures

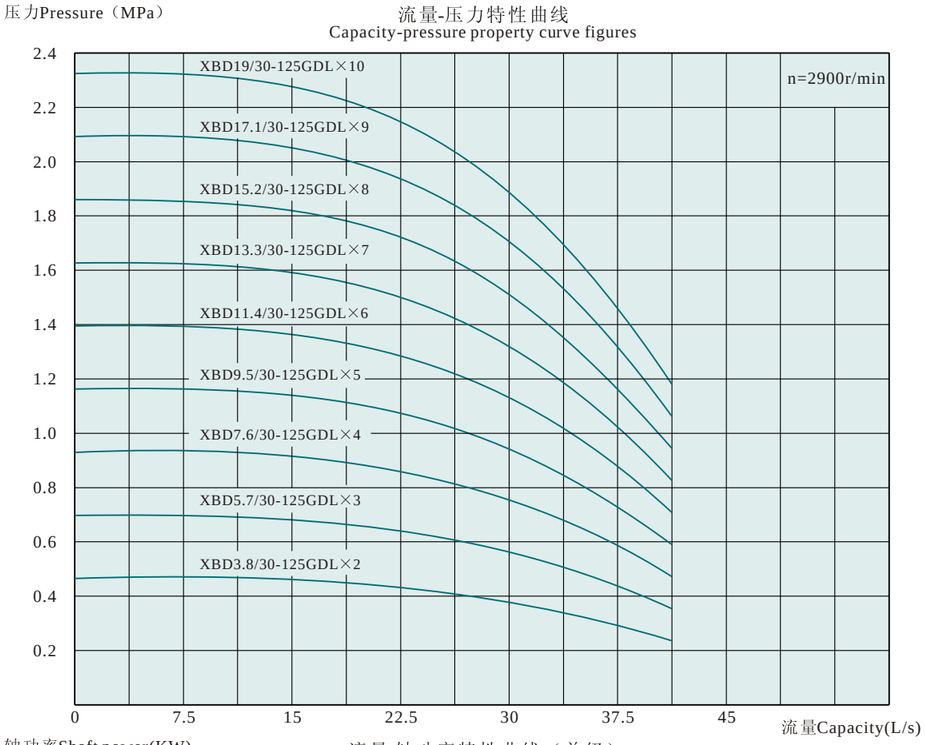

流量-轴功率特性曲线（单级）
Capacity-shaft power property curve figures(single-stage)

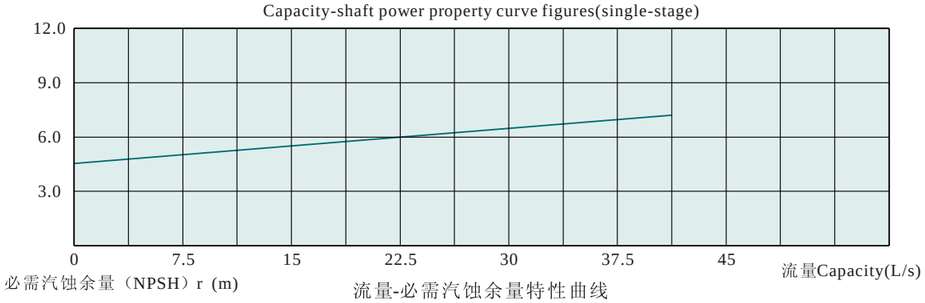

流量-必需汽蚀余量特性曲线
Capacity-(NPSH)r property curve figures

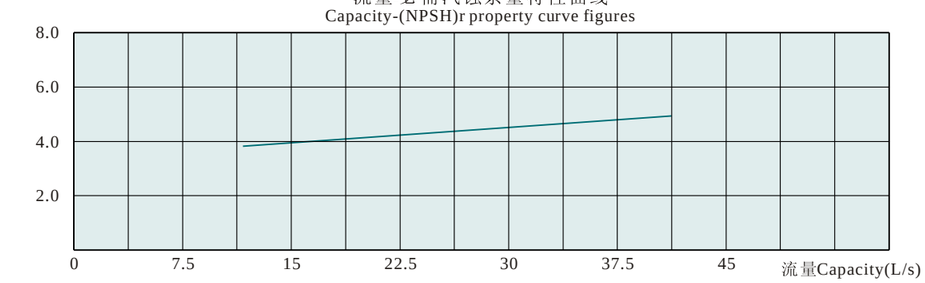

性能参数表 Performance table

泵型号 Pump type	流量 Capacity (L/S)	流量 Capacity (m^3/h)	压力 Pressure (MPa)	功率 Power (kW)	转速 Speed (r/min)	必需汽蚀余量 (NPSH)r (m)	重量 Weight (kg)
XBD3.8/30-125GDL×2	19.4 30 33.3	70 108 120	0.44 0.38 0.33	18.5	2900	4.2 4.5 4.7	292
XBD5.7/30-125GDL×3	19.4 30 33.3	70 108 120	0.67 0.57 0.49	30	2900	4.2 4.5 4.7	430
XBD7.6/30-125GDL×4	19.4 30 33.3	70 108 120	0.89 0.76 0.66	37	2900	4.2 4.5 4.7	463
XBD9.5/30-125GDL×5	19.4 30 33.3	70 108 120	1.12 0.95 0.83	45	2900	4.2 4.5 4.7	555
XBD11.4/30-125GDL×6	19.4 30 33.3	70 108 120	1.34 1.14 0.99	55	2900	4.2 4.5 4.7	640
XBD13.3/30-125GDL×7	19.4 30 33.3	70 108 120	1.57 1.33 1.16	75	2900	4.2 4.5 4.7	840
XBD15.2/30-125GDL×8	19.4 30 33.3	70 108 120	1.76 1.52 1.33	75	2900	4.2 4.5 4.7	855
XBD17.1/30-125GDL×9	19.4 30 33.3	70 108 120	2.02 1.71 1.49	75	2900	4.2 4.5 4.7	870
XBD19/30-125GDL×10	19.4 30 33.3	70 108 120	2.24 1.9 1.66	90	2900	4.2 4.5 4.7	955

具有特定性能参数的泵，经本公司技术部门认可后可供货。

The pump of specific parameters can be supplied after being approved by the technical department of this company.

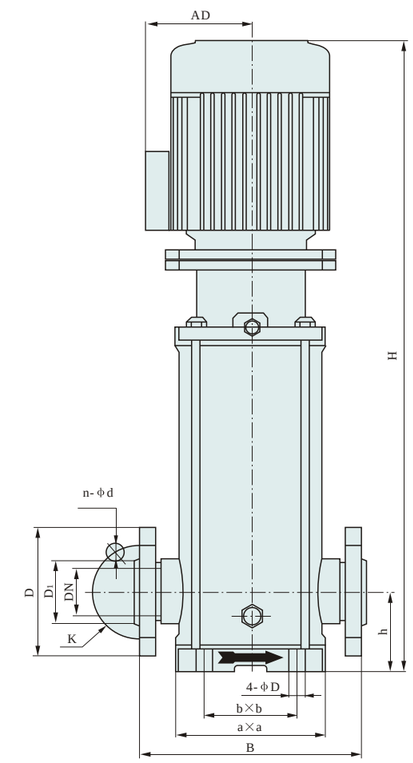

外形及安装尺寸表 External and installation dimension table

泵型号 Pump type	外形及安装尺寸 Figure and installing dimensions							进出口法兰尺寸 Flange dimensions				
	H	a×a	b×b	B	h	4-ϕD	AD	DN	K	D	D1	n-ϕd
XBD3.8/30-125GDL×2	1447	400×400	350×350	500	150	4-ϕ24	255	ϕ125	ϕ220	ϕ270	ϕ184	8-ϕ28
XBD5.7/30-125GDL×3	1638	400×400	350×350	500	150	4-ϕ24	315	ϕ125	ϕ220	ϕ270	ϕ184	8-ϕ28
XBD7.6/30-125GDL×4	1738	400×400	350×350	500	150	4-ϕ24	315	ϕ125	ϕ220	ϕ270	ϕ184	8-ϕ28
XBD9.5/30-125GDL×5	1893	400×400	350×350	500	150	4-ϕ24	345	ϕ125	ϕ220	ϕ270	ϕ184	8-ϕ28
XBD11.4/30-125GDL×6	2123	400×400	350×350	500	150	4-ϕ24	385	ϕ125	ϕ220	ϕ270	ϕ184	8-ϕ28
XBD13.3/30-125GDL×7	2308	400×400	350×350	500	150	4-ϕ24	410	ϕ125	ϕ220	ϕ270	ϕ184	8-ϕ28
XBD15.2/30-125GDL×8	2408	400×400	350×350	500	150	4-ϕ24	410	ϕ125	ϕ220	ϕ270	ϕ184	8-ϕ28
XBD17.1/30-125GDL×9	2508	400×400	350×350	500	150	4-ϕ24	410	ϕ125	ϕ220	ϕ270	ϕ184	8-ϕ28
XBD19/30-125GDL×10	2658	400×400	350×350	500	150	4-ϕ24	410	ϕ125	ϕ220	ϕ270	ϕ184	8-ϕ28

XBD–GDL系列电动消防泵组性能曲线图 XBD–GDL series electric fire–fighting pump group property curve figures

流量-压力特性曲线
Capacity-pressure property curve figures

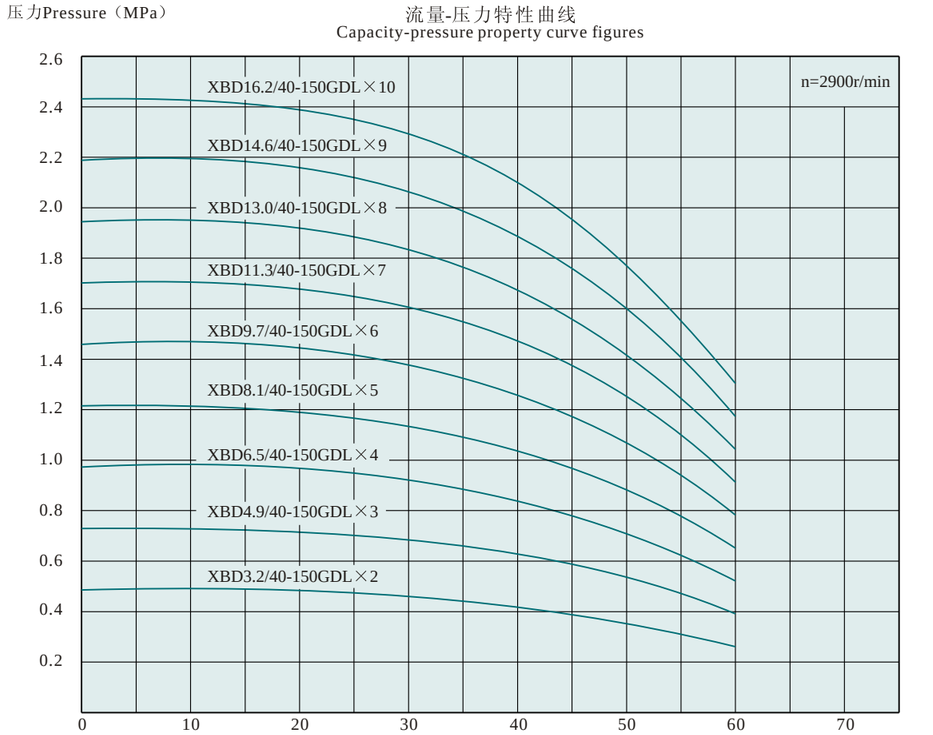

流量-轴功率特性曲线（单级）
Capacity-shaft power property curve figures(single-stage)

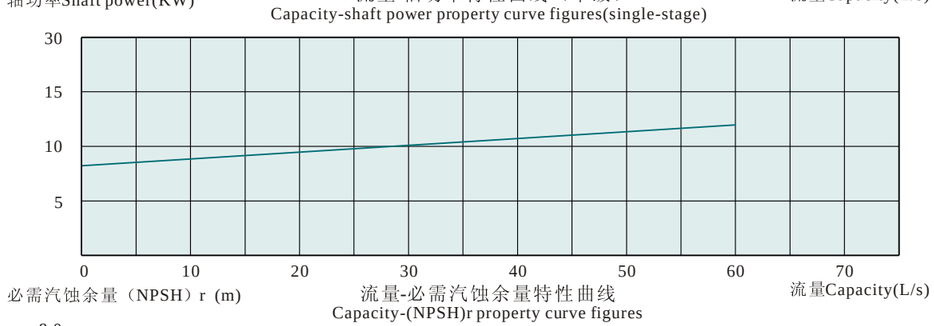

流量-必需汽蚀余量特性曲线
Capacity-(NPSH)r property curve figures

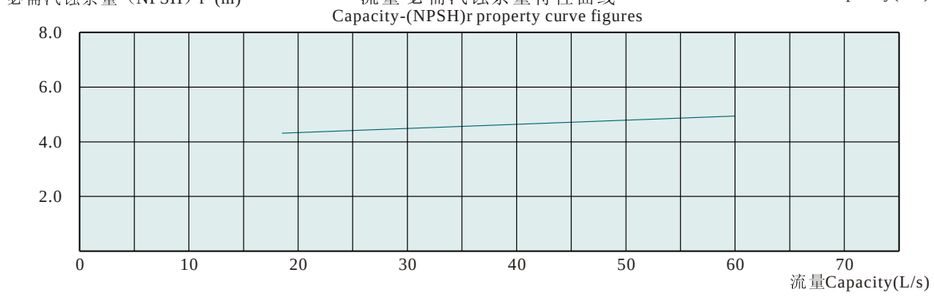

性能参数表 Performance table

泵型号 Pump type	流量 Capacity (L/S)	流量 Capacity (m^3/h)	压力 Pressure (MPa)	功率 Power (kW)	转速 Speed (r/min)	必需汽蚀余量 (NPSH)r (m)	重量 Weight (kg)
XBD3.2/40-150GDL×2	28 40 48	101 144 173	0.38 0.32 0.26	22	2900	4.4 4.5 4.7	422
XBD4.9/40-150GDL×3	28 40 48	101 144 173	0.57 0.49 0.39	37	2900	4.4 4.5 4.7	452
XBD6.5/40-150GDL×4	28 40 48	101 144 173	0.76 0.65 0.52	45	2900	4.4 4.5 4.7	613
XBD8.1/40-150GDL×5	28 40 48	101 144 173	0.95 0.81 0.65	55	2900	4.4 4.5 4.7	820
XBD9.7/40-150GDL×6	28 40 48	101 144 173	1.14 0.97 0.78	75	2900	4.4 4.5 4.7	836
XBD11.3/40-150GDL×7	28 40 48	101 144 173	1.33 1.13 0.91	75	2900	4.4 4.5 4.7	922
XBD13.0/40-150GDL×8	28 40 48	101 144 173	1.52 1.3 1.04	90	2900	4.4 4.5 4.7	1198
XBD14.6/40-150GDL×9	28 40 48	101 144 173	1.71 1.46 1.17	110	2900	4.4 4.5 4.7	1214
XBD16.2/40-150GDL×10	28 40 48	101 144 173	1.9 1.62 1.3	110	2900	4.4 4.5 4.7	1340

具有特定性能参数的泵，经本公司技术部门认可后可供货。

The pump of specific parameters can be supplied after being approved by the technical department of this company.

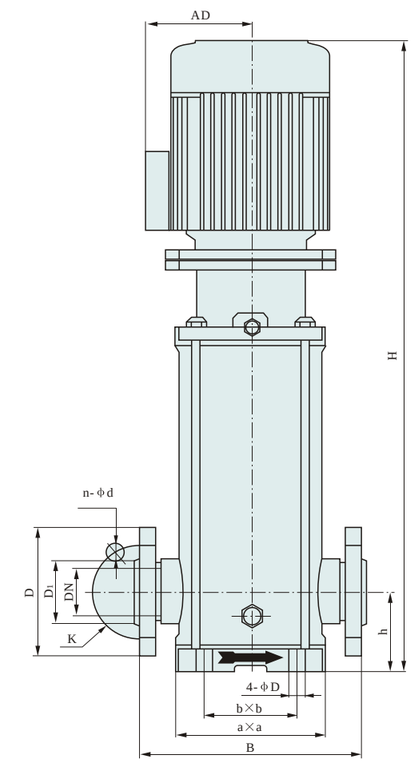

外形及安装尺寸表 External and installation dimension table

泵型号 Pump type	外形及安装尺寸 Figure and installing dimensions							进出口法兰尺寸 Flange dimensions				
	H	a×a	b×b	B	h	4-ϕD	AD	DN	K	D	D_1	n-ϕd
XBD3.2/40-150GDL×2	1597	400×400	350×350	500	175	4-ϕ24	315	ϕ150	ϕ250	ϕ300	ϕ211	8-ϕ28
XBD4.9/40-150GDL×3	1714	400×400	350×350	500	175	4-ϕ24	385	ϕ150	ϕ250	ϕ300	ϕ211	8-ϕ28
XBD6.5/40-150GDL×4	2016	400×400	350×350	500	175	4-ϕ24	410	ϕ150	ϕ250	ϕ300	ϕ211	8-ϕ28
XBD8.1/40-150GDL×5	2218	400×400	350×350	500	175	4-ϕ24	410	ϕ150	ϕ250	ϕ300	ϕ211	8-ϕ28
XBD9.7/40-150GDL×6	2335	400×400	350×350	500	175	4-ϕ24	576	ϕ150	ϕ250	ϕ300	ϕ211	8-ϕ28
XBD11.3/40-150GDL×7	2502	400×400	350×350	500	175	4-ϕ24	576	ϕ150	ϕ250	ϕ300	ϕ211	8-ϕ28
XBD13.0/40-150GDL×8	2809	400×400	350×350	500	175	4-ϕ24	576	ϕ150	ϕ250	ϕ300	ϕ211	8-ϕ28
XBD14.6/40-150GDL×9	2926	400×400	350×350	500	175	4-ϕ24	576	ϕ150	ϕ250	ϕ300	ϕ211	8-ϕ28
XBD16.2/40-150GDL×10	3143	400×400	350×350	500	175	4-ϕ24	576	ϕ150	ϕ250	ϕ300	ϕ211	8-ϕ28

XBD–GDL系列电动消防泵组性能曲线图 XBD–GDL series electric fire–fighting pump group property curve figures

流量-压力特性曲线
Capacity-pressure property curve figures

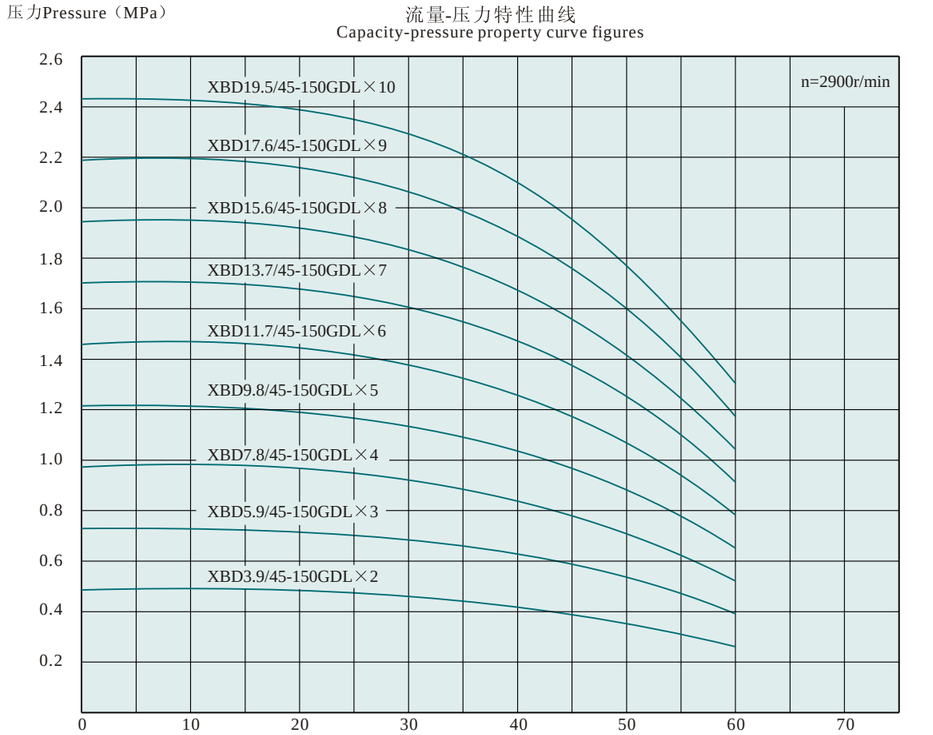

流量-轴功率特性曲线（单级）
Capacity-shaft power property curve figures(single-stage)

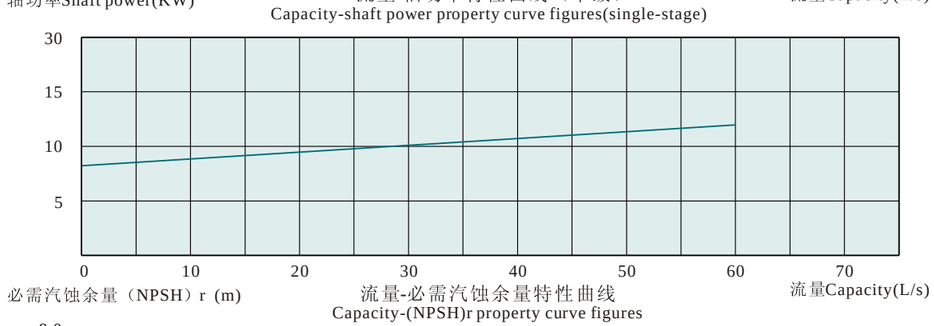

流量-必需汽蚀余量特性曲线
Capacity-(NPSH)r property curve figures

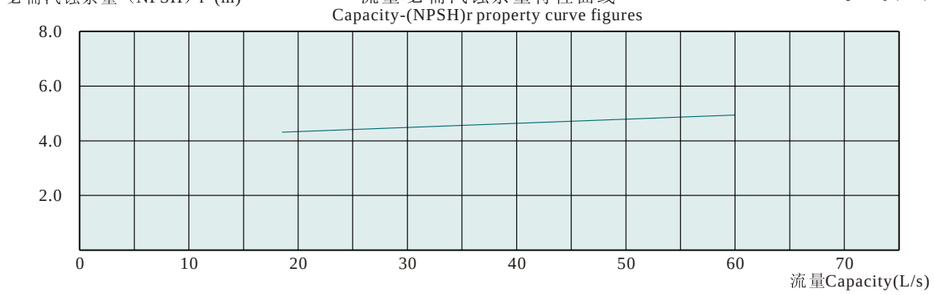

性能参数表 Performance table

泵型号 Pump type	流量 Capacity (L/S)	流量 Capacity (m^3/h)	压力 Pressure (MPa)	功率 Power (kW)	转速 Speed (r/min)	必需汽蚀余量 (NPSH)r (m)	重量 Weight (kg)
XBD3.9/45-150GDL×2	31.1 45 53.3	112 162 192	0.46 0.39 0.34	30	2900	4.4 4.5 4.7	422
XBD5.9/45-150GDL×3	31.1 45 53.3	112 162 192	0.69 0.59 0.51	37	2900	4.4 4.5 4.7	452
XBD7.8/45-150GDL×4	31.1 45 53.3	112 162 192	0.92 0.78 0.68	55	2900	4.4 4.5 4.7	613
XBD9.8/45-150GDL×5	31.1 45 53.3	112 162 192	1.15 0.98 0.85	75	2900	4.4 4.5 4.7	820
XBD11.7/45-150GDL×6	31.1 45 53.3	112 162 192	1.38 1.17 1.02	75	2900	4.4 4.5 4.7	836
XBD13.7/45-150GDL×7	31.1 45 53.3	112 162 192	1.61 1.37 1.19	90	2900	4.4 4.5 4.7	922
XBD15.6/45-150GDL×8	31.1 45 53.3	112 162 192	1.84 1.56 1.36	110	2900	4.4 4.5 4.7	1198
XBD17.6/45-150GDL×9	31.1 45 53.3	112 162 192	2.07 1.76 1.53	110	2900	4.4 4.5 4.7	1214
XBD19.5/45-150GDL×10	31.1 45 53.3	112 162 192	2.3 1.95 1.7	132	2900	4.4 4.5 4.7	1340

具有特定性能参数的泵，经本公司技术部门认可后可供货。

The pump of specific parameters can be supplied after being approved by the technical department of this company.

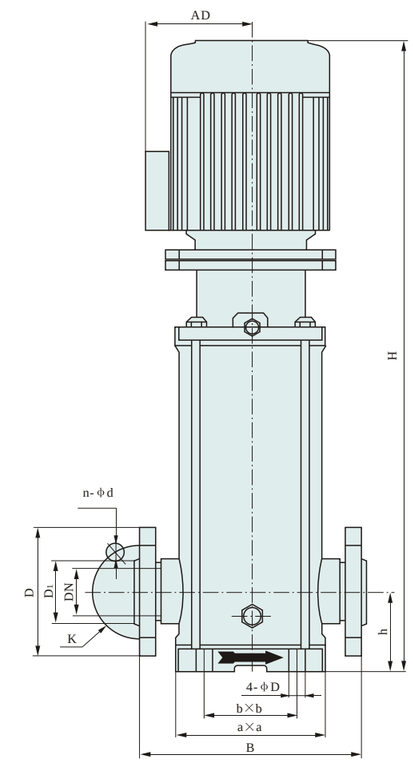

外形及安装尺寸表 External and installation dimension table

泵型号 Pump type	外形及安装尺寸 Figure and installing dimensions							进出口法兰尺寸 Flange dimensions				
	H	a×a	b×b	B	h	4-ϕD	AD	DN	K	D	D_1	n-ϕd
XBD3.9/45-150GDL×2	1597	400×400	350×350	500	175	4-ϕ24	315	ϕ150	ϕ250	ϕ300	ϕ211	8-ϕ28
XBD5.9/45-150GDL×3	1714	400×400	350×350	500	175	4-ϕ24	385	ϕ150	ϕ250	ϕ300	ϕ211	8-ϕ28
XBD7.8/45-150GDL×4	2016	400×400	350×350	500	175	4-ϕ24	410	ϕ150	ϕ250	ϕ300	ϕ211	8-ϕ28
XBD9.8/45-150GDL×5	2218	400×400	350×350	500	175	4-ϕ24	410	ϕ150	ϕ250	ϕ300	ϕ211	8-ϕ28
XBD11.7/45-150GDL×6	2335	400×400	350×350	500	175	4-ϕ24	576	ϕ150	ϕ250	ϕ300	ϕ211	8-ϕ28
XBD13.7/45-150GDL×7	2502	400×400	350×350	500	175	4-ϕ24	576	ϕ150	ϕ250	ϕ300	ϕ211	8-ϕ28
XBD15.6/45-150GDL×8	2809	400×400	350×350	500	175	4-ϕ24	576	ϕ150	ϕ250	ϕ300	ϕ211	8-ϕ28
XBD17.6/45-150GDL×9	2926	400×400	350×350	500	175	4-ϕ24	576	ϕ150	ϕ250	ϕ300	ϕ211	8-ϕ28
XBD19.5/45-150GDL×10	3143	400×400	350×350	500	175	4-ϕ24	576	ϕ150	ϕ250	ϕ300	ϕ211	8-ϕ28

泵附件及其尺寸 Pump spare figure and dimensions

联接板
Connection board

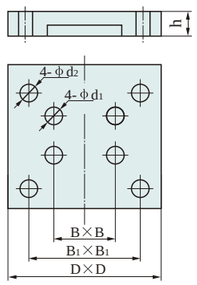

隔振垫
Vibration-insulating pad

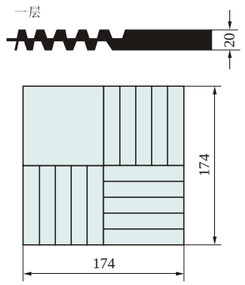

隔振器
Vibration-isoaltor

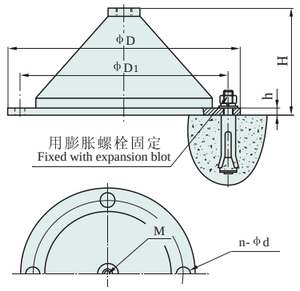

泵口径 Pump caliber	联接板尺寸 Connection board dimensions							隔振器尺寸 Vibration isolator dimensions							
	型号	D	h	B	B1	d1	d2	型号	M	D	D1	H	h	n-d	配膨胀螺栓规格 Expansion bolt specs
25	1#	500	55	200	440	14	14	JG2-2	M12	Φ150	Φ130	65	9	4-Φ8.5	M8×80
40	2#	500	55	205	440	14	14	JG2-2	M12	Φ150	Φ130	65	9	4-Φ8.5	M8×80
50	3#	600	55	235	540	18	14	JG2-2	M12	Φ150	Φ130	65	9	4-Φ8.5	M8×80
65	3#	600	55	235	540	18	14	JG2-2	M12	Φ150	Φ130	65	9	4-Φ8.5	M8×80
80	4#	700	55	300	640	18	18	JG3-2	M16	Φ200	Φ170	87	9	4-Φ12.5	M12×110
100	5#	700	55	350	640	18	18	JG3-2	M16	Φ200	Φ170	87	9	4-Φ12.5	M12×110
125	6#	800	55	350	740	24	22	JG4-2	M20	Φ290	Φ260	133	9	4-Φ12.5	M12×110
150	6#	800	55	350	740	24	22	JG4-2	M20	Φ290	Φ260	133	9	4-Φ12.5	M12×110

泵基础图及其联接尺寸 Pump basic figure and connection dimensions

直接联接
Straight connection

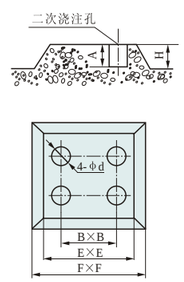

配联接板、隔振垫
Mix connection board、vibration-insulating pad

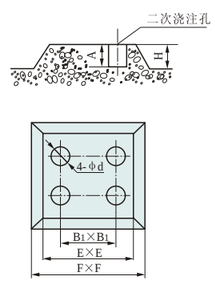

配联接板、隔振器
Mix connection board、vibration-isoaltor

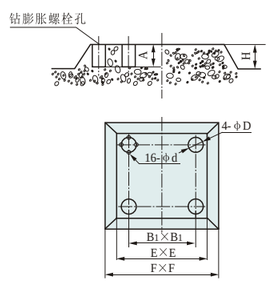

泵口径 Pump caliber	直接安装基础尺寸 Straight connection basic dimensions							配联接板、隔振垫基础尺寸 Mix connection board、vibration pad basic dimensions							配联接板、隔振器基础尺寸 Mix connection board、vibration pad basic dimensions						
	H	A	B	E	F	d	地脚螺栓规格 Foundation bolt specs	H	A	B1	E	F	d	地脚螺栓规格 Foundation bolt specs	H	A	B1	E	F	D	d
25	200	300	200	500	550	60	M12×200	250	250	440	750	800	60	M12×200	200	60	440	750	800	130	12.5
40	200	300	205	500	550	60	M12×200	250	250	440	750	800	60	M12×200	200	60	440	750	800	130	12.5
50	250	300	235	550	600	80	M16×300	300	250	540	850	900	60	M12×200	250	60	540	850	900	130	12.5
65	250	300	235	550	600	80	M16×300	300	250	540	850	900	60	M12×200	250	60	540	850	900	130	12.5
80	300	300	300	600	650	80	M16×300	300	250	640	950	1050	80	M16×300	300	75	640	950	1050	170	19
100	300	300	350	600	650	80	M16×300	300	250	640	950	1050	80	M16×300	300	75	640	950	1050	170	19
125	300	400	350	650	700	80	M20×400	400	350	740	1050	1150	80	M20×400	300	75	740	1050	1150	260	19
150	300	400	350	650	700	80	M20×400	400	350	740	1050	1150	80	M20×400	300	75	740	1050	1150	260	19

管路损耗参考表 Reference table for pipeline loss

直管摩擦损失简表(供估计用)100m直管损失米数以新铸铁管为标准，旧管加倍。

Brief table for the frictional loss of a straight pipe(for evaluation).the lost meters of a 100m straight pipe takes the newly cast iron pipe as the standard and multiple for the old one.

管径 Pipe diameter (mm)	流量 Capacity (L/s)																										
	1	2	4	6	8	10	15	20	25	30	40	50	60	70	80	90	100	110	120	130	140	160	180	200
25	32.7	13.0																						
38	3.5	14	55																					
50	0.8	3.1	13	29																				
65		1.6	3.2	7.1	13	20																		
75		0.4	0.8	3.3	5.9	9.6	21.6																	
100			0.23	0.8	1.3	2.1	6.8	8.6	13	19.4														
125				0.23	0.4	0.63	1.3	2.7	4.1	5.9	10.7													
150					0.16	0.26	0.58	1.1	1.6	2.3	4.2	6.4	9.4											
175						0.11	0.27	0.5	0.74	1.05	1.9	2.9	4.3	5.8	7.7	9.6								
200							0.13	0.26	0.37	0.53	0.93	1.5	2.1	2.9	3.7	4.7	6.1	7.2						
250								0.07	0.12	0.18	0.30	0.48	0.68	0.93	1.2	1.5	1.9	2.3	2.8	3.3	3.7	4.9	5.2	
300										0.07	0.12	0.19	0.27	0.37	0.49	0.61	0.76	0.9	1.1	1.3	1.5	2.0	2.4	3.0

阀及弯管折合直管长度(每个)
The length of a straight pipe converted into from both valve and elbow(each)

种类 Variety	折合直管直径倍数 Convert into the times of the diameter of a straight pipe	备注 Remark
标准弯管 Standard elbow	12	未畅开加倍 Multiple in case of unopen
全开闸阀 Fully opened gate valve	25	
逆止阀 Back valve	100	
底阀 Foot valve	100	部分堵塞加倍 Partial block-up multipled

注：例如100mm直径管，底阀折合100倍直径等于100×100=10000mm=10m直径长度，假定流量为8L/s查上表，直管每100m损失1.3m，则10m损失0.13m，即一个100mm底阀，流量为8L/s时，则损失扬程0.13m。

Note:For instance, a 100mmdiameter pipe, the foot valve has a 100×100=10000mm=10m diameter when which is converted into 100 times that of the pipe s diameter. Suppose the flow is 8L/s, looked into the above table, the loss of the straight pipe is 1.3m each 100m, then the one for 100mm is 0.13m, that is, for a 100mm foot valve with a flow 8L/s, is head loww is 0.13m.

一定管路直径之最大流量限制
Limit of the maximun flow for a pipe with a certain diameter

管路直径 Pipeline diameter (mm)	最大流量 Maximum flow (L/s)	最大流速 Meximum flow rate (m/s)	管路直径 Pipeline diameter (mm)	最大流量 Maximum flow (L/s)	最大流速 Meximum flow rate (m/s)
25	1	2.04	125	30.0	2.44
38	2.5	1.69	150	43.0	2.45
50	4.17	2.12	175	60.0	2.49
65	6.67	2.01	200	83.3	2.69
75	10.0	2.26	250	133.0	2.72
100	18.4	2.33	300	192.0	2.71

注：超过此限使管路损失显著增加。

Note: The pipeline loss would be made greatly increased once the limit is over.