由于我们在不断努力改进产品，我们保留样本数据更改的权利，敬请谅解。
As we are constantly endeavouring to improve the performance of our equipment.
The company reserves the right to make alteration from time to time and equipment differ from that detailed in this brochure.

上海连成(集团)有限公司
SHANGHAI LIANCHENG (GROUP) CO.,LTD.
上海连成泵业制造有限公司
SHANGHAI LIANCHENG PUMP-MANUFACTURE CO.,LTD.

地址：上海市江桥曹安公路3616-3618号
邮编：201812
总机：(021)59138888
传真：(021)59136782
800免费咨询电话：800-820-5009

Address:3616-3618 Cao'an Road, Jiangqiao Shanghai
P.C.: 201812
Switchboard: (021) 59138888
Fax: (021) 59136782
800 Free consultation Tel:800-820-5009

www.lcpumps.com
webmaster@lcpumps.com

□ 印刷日期：20th.Feb.2008

版权所有 翻印必究 All rights reserved.Pirate is forbidden.

Product Catolog 2008

连成集团
LIANCHENG GROUP

中国驰名商标 | 国家产品质量免检

LDTN 系列凝结水泵

LDTN SERIES CONDENSATE PUMP

目　录

CONTENTS

用 途 Application 1

结 构 Construction 1

轴 承 Bearing 1

联轴器 Couping 1

轴 封 Shaft seal 1

转 向 Directions 2

型号说明 Model meaning 2

材 料 Materials 2

结构图 Construction drawing 3

性能曲线 Performance curev 5

性能表 Performance table 6

LDTN 型泵安装尺寸图 Outing & installalling dimensions drawing 7

LDTN 型泵安装尺寸表 Outing & installalling dimensions table 8

用 途 Application

LDTN 型凝结水泵适用于输送火(核)电厂凝汽器中凝结水，也可用于NPSH或安装基面受限制的化工流程中输送物化性能类似于水的介质，性能范围：

流量：120~530m^3/h

扬程：48~360m

介质温度：常温80℃(特殊要求可达120℃)

Type LDTN condensate pump are used for pumping condensating water in condenser of thermal (nuclear) plant, also be used for pumping other media which are similar to water in physical and chemical properties. Its range of performance are as follows:

Capacity: 120~530m^3/h

Head: 48~360m

Media temperature: normal 80℃(special up to 120℃)

结 构 Construction

LDTN 型泵为立式多级筒袋式结构，吸入与吐出接口分别位于泵筒体和吐出座上，二者可以做180°、90°等多角度变位；叶轮为封闭式。

Type LDTN condensate pump are a vertical muilt-stage columnar pump, suction and dischar nozzle are respectively aranged on the barrel and discharge seat and both can be altered on place of 180°, 90° or many degrees; the impeller is closed.

轴 承 Bearing

泵设有水润滑轴承，用以承受泵转子径向力。泵转子的轴向力由一对串联轴承承受。

The pump has water-lubrication berings so that bear redial thrust of rotor. Axial thrust of rotor is balanced by thrust bearing or motor.

联轴器 Coupling

泵转子内部轴间用卡环式筒形联轴器、螺纹联轴器连接，泵转子与电机轴用弹性圆柱销联轴器连接。

Pump rotor and line shaft are connect by cutting colummar coupling, pump rotor and motor shaft are connected by elasticity cylinder pin coupling.

轴 封 Shaft seal

轴封为软填料，可按特殊定货设计机械密封。

Shaft seal is soft-packing, the mechanical seal can be assembled according to special requirements.

转 向 Directions

俯视逆时针方向旋转。

The rotating derection of pump are disigned counter-clockwise when overlooking.

型号说明 Model meaning

6 L D T N - 6

- 6 — 泵级数 Stage of pump
- N — 凝结水泵 Condensate pump
- T — 筒袋式 Columnar
- D — 多级 Multi
- L — 立式 Vertical
- 6 — 凝结水泵排号 Number of condensate pump

材 料 Materials

叶轮 Impeller	ZG1Cr13
导流壳 Diversion casing	HT250 or QT500-7
圆筒体 Bearred	优质碳素钢或1Cr18Ni9Ti High carbon steel or 1Cr18Ni9Ti
变径管 Redacer	HT250 or QT500-7
泵轴 Pump shaft	40Cr或优质碳素钢 40Cr or high carbon steel
泵座 Pump seat	HT250
导轴承 Guide bearing	BBF6. P23

LDTN 型泵结构图(一) LDTN construction drawing(one)

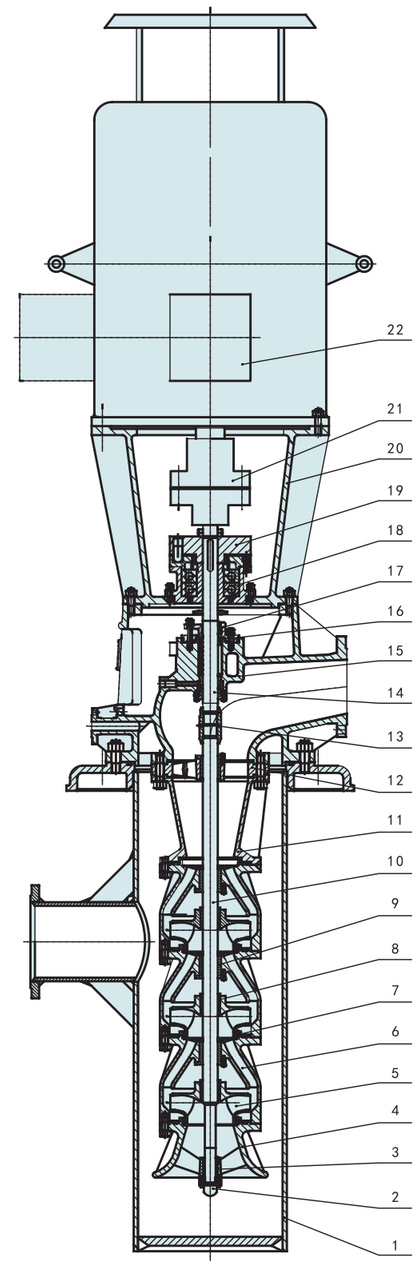

1	圆筒体 Round barrel
2	轴头螺母 Shaft tip nut
3	下轴承 Lower bearing
4	轴承体支座 Bearing body support
5	叶轮 Impeller
6	导流壳 Guide shell
7	密封环 Seal ring
8	锥形套 Conical sleeve
9	轴承衬套 Bearing bush
10	泵轴 Pump shaft
11	出水管 Water-out pipe
12	轴承体 Bearing body
13	螺纹联轴器 Threaded clutch
14	电机轴 Motor shaft
15	泵座 Pump foundation
16	填料/机械密封 Packing/mechanical seal
17	填料压盖/机封压盖 Packing cover/mechanical seal cover
18	滚动轴承 Rolling bearing
19	防反转装置 Anti-reversal device
20	电机支架 Motor stand
21	弹性联轴器 Elastic clutch
22	电机 Motor

LDTN 型泵结构图(二) LDTN construction drawing(two)

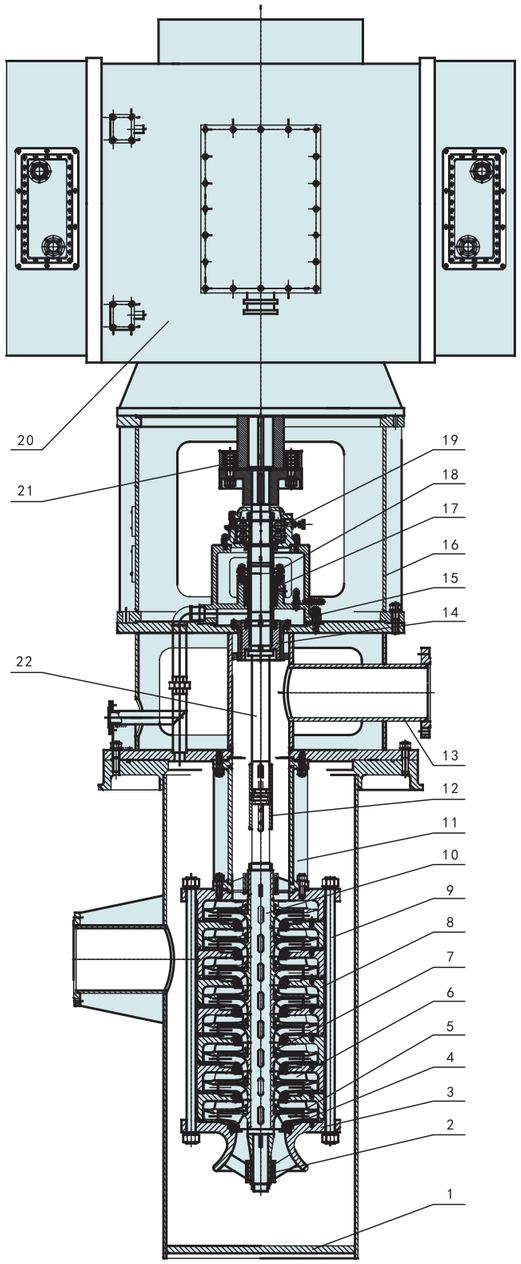

1	圆筒体 Round barrel
2	导轴承 Guide bearing
3	吸入喇叭管 Suck-in flare
4	密封环 Seal ring
5	叶轮 Impeller
6	导叶 Guide vane
7	导叶套 Guide vane sleeve
8	中段 Mid-section
9	拉杆 Pull bar
10	泵轴 Pump shaft
11	接管 Nipple
12	卡环式筒形联轴器 Clasp type barrel clutch
13	泵座 Pump foundation
14	平衡鼓 Balancing drum
15	密封函体 Seal case
16	电机支架 Motor stand
17	填料 Packing
18	填料压盖 Packing gland
19	轴承部件 Bearing part
20	电机 Motor
21	弹性联轴器 Elastic clutch
22	传动轴 Drive shaft

性能曲线 Performance curve

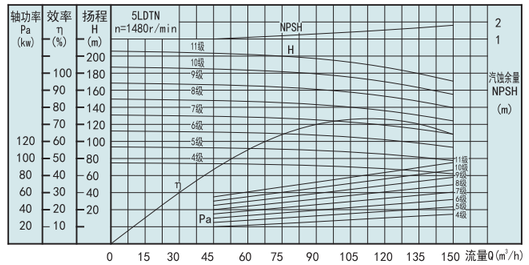

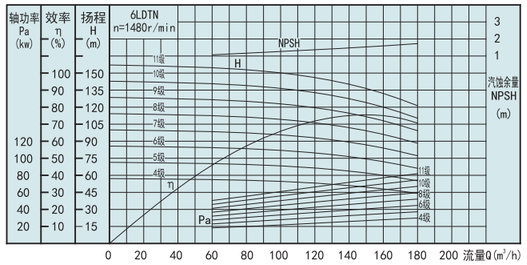

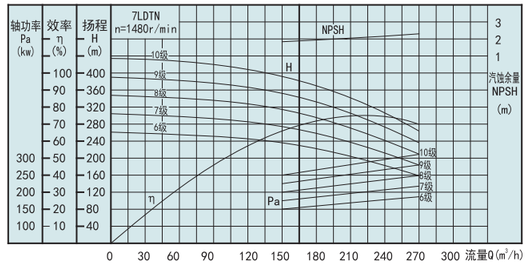

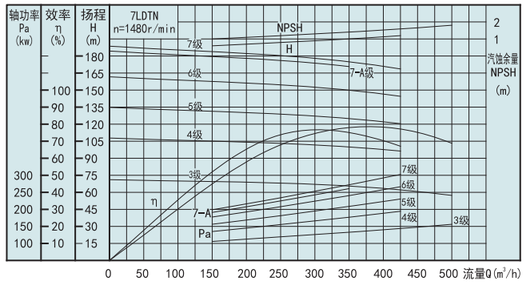

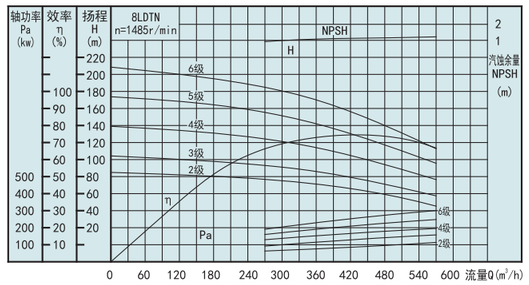

性能表 Performance table

泵型号 Pump model	流量 Capacity (m^3/h)	扬程 Head (m)	转速 Speed (rpm)	效率 Eff. (%)	汽蚀余量 (NPSH)r (m※)	电机功率 Power (kW)	筒体外径×机组总高 φD×H	泵组重量 Weight (t)	备注 Remark
5LDTN-4	120	68	1480	73	1.5	55	φ456×3578	2.2	
5LDTN-5	120	85	1480	73	1.5	55	φ456×3860	2.2	
5LDTN-6	120	102	1480	73	1.5	90	φ456×4277	2.2	
5LDTN-7	120	119	1480	73	1.5	90	φ456×4559	2.4	
5LDTN-8	120	136	1480	73	1.5	90	φ456×4841	2.4	
5LDTN-9	120	153	1480	73	1.5	90	φ456×5123	2.6	
5LDTN-10	120	170	1480	73	1.5	110	φ456×5625	2.6	
5LDTN-11	120	187	1480	73	1.5	110	φ456×5907	2.6	
6LDTN-4	160	48	1480	75	1.6	55	φ426×3411	2	
6LDTN-5	160	60	1480	75	1.6	55	φ426×3651	2	
6LDTN-6	160	72	1480	75	1.6	55	φ426×3891	2	
6LDTN-7	160	84	1480	75	1.6	55	φ426×4131	2.2	
6LDTN-8	160	96	1480	75	1.6	90	φ426×4506	2.2	
6LDTN-9	160	108	1480	75	1.6	90	φ426×4746	2.4	
6LDTN-10	160	120	1480	75	1.6	90	φ426×4986	2.4	
6LDTN-11	160	132	1480	75	1.6	90	φ426×5226	2.4	
7LDTN-3	410	63	1480	78	1.5	160	φ680×5696	5.5	
7LDTN-4	350	100	1480	75	1	220	φ680×5696	6.2	
7LDTN-5	350	125	1480	75	1	250	φ680×5696	6.2	
7LDTN-6	350	150	1480	75	1	250	φ680×5696	6.2	
7LDTN-7	350	175	1480	75	1	250	φ680×5696	6.2	
7LDTN-7-A	275	175	1480	76	1.5	250	φ680×5696	6.2	
7LDTNA-6	200	210	1480	75	2.0	250	φ780×4845	5.6	
7LDTNA-7	200	245	1480	75	2.0	250	φ780×4845	5.7	
7LDTNA-8	200	280	1480	75	2.0	250	φ780×4845	5.8	
7LDTNA-9	200	315	1480	75	2.0	315	φ780×4845	6.0	
7LDTNA-10	200	350	1480	75	2.0	315	φ780×4845	6.1	
8LDTN-2A	530	52	1485	71	1.11	160	φ830×7575	9	
8LDTN-3	360	86	1485	73	1.11	250	φ830×7575	10	
8LDTN-4	360	114	1485	75	1.11	315	φ830×7575	11	
8LDTN-5	360	142	1485	76	1.11	315	φ830×7575	11	
8LDTN-6Z	360	170	1485	76	1.11	400	φ830×7575	11	

“※”栏值以吸入法兰中心为基准

The price with symbol are hased are basedon centre of suction flange.

LDTN 型泵安装尺寸图 Outling & installing dimensions drawing

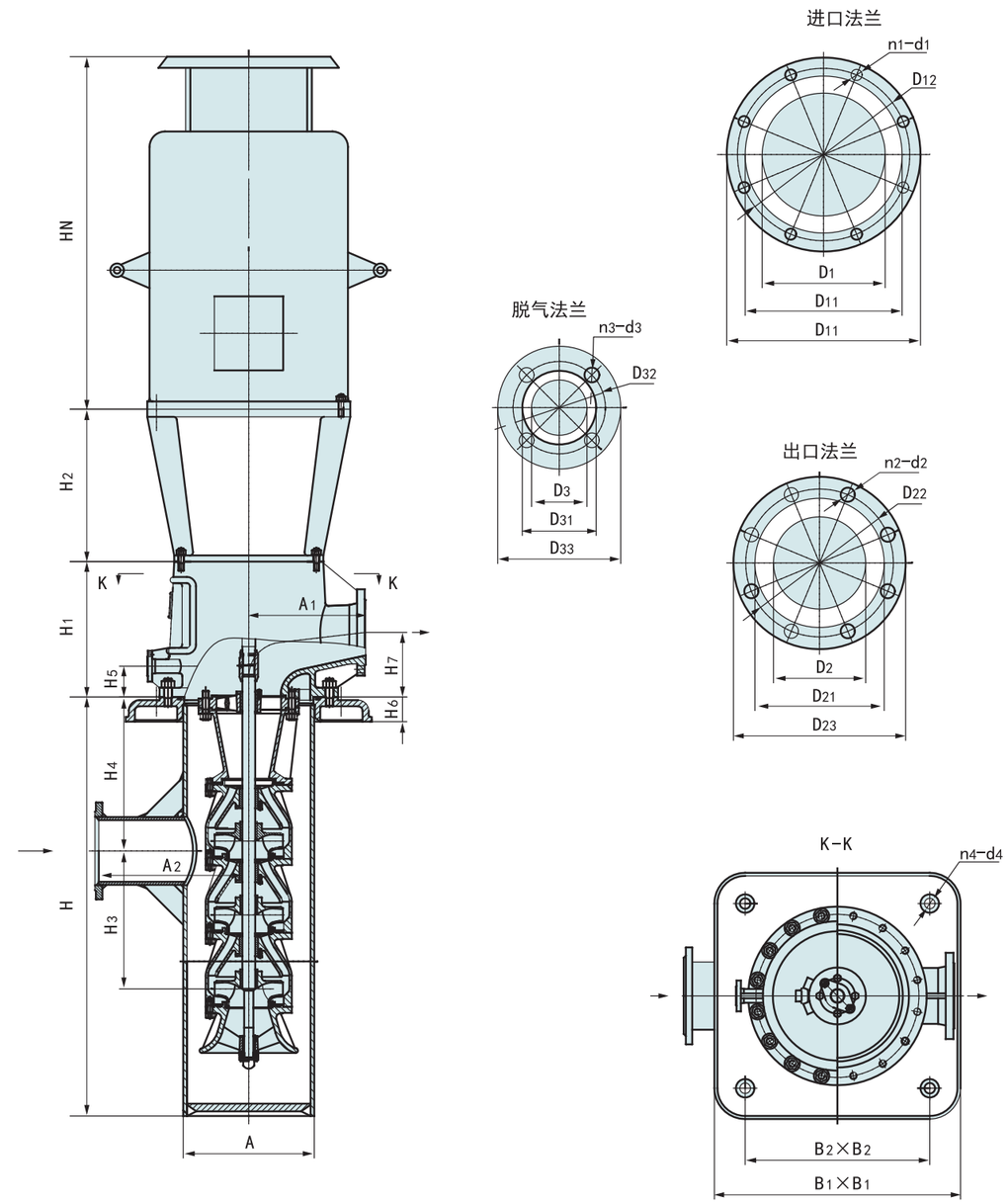

LDTN 型泵安装尺寸表 Outling & installing dimensions table

型号 Model	H	H_1	H_2	H_3	H_4	H_5	H_6	H_7	HN	A	A_1	A_2	进口法兰 Inlet flange					出口法兰 Outlet flange					脱气法兰 Degassing flange					$B_1 \times B_1$	$B_2 \times B_2$	n4-d4	地脚螺栓 Foot bolt	配套电机 Corollary motor		
													D_1	D_{11}	D_{12}	D_{13}	n1-d1	D_2	D_{21}	D_{22}	D_{23}	n2-d2	D_3	D_{31}	D_{32}	D_{33}	n3-d3				M×L	型号	功率	电压 (V)
5LDTN-4	1588	440	475	882	500	100	80	210	895	456	380	500	200	255	280	315	8-φ18	150	210	240	280	8-φ23	25	60	75	100	4-φ12	800×800	600×600	4-φ34	M30×630	Y250M-4	55	380
5LDTN-5	1870	440	475	1164																														
5LDTN-6	2152	440	475	1446					1030																							Y280S-4	90	
5LDTN-7	2434	440	475	1728																														
5LDTN-8	2716	440	475	2010																														
5LDTN-9	2998	440	475	2292																														
5LDTN-10	3280	440	505	2574					1220																							Y315S-4	110	
5LDTN-11	3562	440	505	2856																														
6LDTN-4	1601	440	475	960	500	100	80	210	895	456	380	500	200	255	280	315	8-φ18	150	210	240	280	8-φ23	25	60	75	100	4-φ12	800×800	600×600	4-φ34	M30×630	Y250M-4	55	380
6LDTN-5	1841	440	475	1200																														
6LDTN-6	2081	440	475	1440																														
6LDTN-7	2321	440	475	1680																														
6LDTN-8	2561	440	475	1920					1030																							Y280S-4	90	
6LDTN-9	2801	440	475	2160																														
6LDTN-10	3041	440	475	2400																														
6LDTN-11	3281	440	475	2640																														
7LDTN-3	3360	836	-	1765	1000	170	120	310	1500	680	520	600	350	412	445	485	12-φ23	250	332	370	425	12-φ30	50	90	110	140	4-φ14	1200×1200	950×950	4-φ48	M42×800	YL355-4	160	6000
7LDTN-4																																	220	
7LDTN-5																																	250	
7LDTN-6																																		
7LDTN-7																																		
7LDTNA-6	200	550	790	630	800	170	120	270	1500	780	680	750	250	309	335	375	12-φ18	200	278	320	375	12-φ26	40	78	100	130	4-φ14	1300×1300	1050×1050	4-φ48	M42×800	YL355-4	250	6000
7LDTNA-7																																		
7LDTNA-8																																		
7LDTNA-9																																Y400L-4	315	
7LDTNA-10																																		
8LDTN-2A	4175	942	200	2390	975	230	175	392	1500	830	800	650	450	532	565	615	20-φ25	300	390	430	485	16-φ30	50	100	125	160	4-φ18	1500×1500	1200×1200	4-φ48	M42×800	YL355-4	160	6000
8LDTN-3			300						2120																								250	
8LDTN-4																																Y400L-4	315	
8LDTN-5																																		
8LDTN-6Z									2158																								400	